FOREWORD

This wiring diagram manual has been prepared to provide information on the electrical system of the 1990 TOYOTA CAMRY.

Applicable models: SV21, 25 series
VZV21 series

For service specifications and repair procedures of the above models other than those listed in this manual, refer to the following manuals;

Manual Name	Pub. No.
• 1990 Camry Repair Manual Volume 1 Volume 2	RM151U1 RM151U2
• TCCS (3S–FE) Diagnosis Manual	DM011U
• ECT (A140E) Diagnosis Manual	DM013U
• ECT (A540E) Diagnosis Manual	DM014U
• 1990 Model New Car Features	NCF059U

All information in this manual is based on the latest product information at the time of publication. However, specifications and procedures are subject to change without notice.

TOYOTA MOTOR CORPORATION

INTRODUCTION

This manual consists of the following 12 sections:

No.	Section	Description
1	INDEX	Index of the contents of this manual.
2	INTRODUCTION	Brief explanation of each section.
3	HOW TO USE THIS MANUAL	Instructions on how to use this manual.
4	TROUBLE–SHOOTING	Describes the basic inspection procedures for electrical circuits.
5	ABBREVIATIONS	Defines the abbreviations used in this manual.
6	GLOSSARY OF TERMS AND SYMBOLS	Defines the symbols and functions of major parts.
7	RELAY LOCATIONS	Shows position of the Electronic Control Unit, Computer, Relays, Junction Block, etc. This section is closely related to the system circuit.
8	ELECTRICAL WIRE ROUTING	Describes position of the Parts Connectors, Ground points, etc. This section is closely related to the system circuit.
9	POWER SOURCE (POWER–LOAD, Reference)	Describes power distribution from the power supply to various electrical loads.
10	INDEX	Index of the system circuits.
11	SYSTEM CIRCUITS	Electrical circuits of each system are shown from the power supply through ground points. Wiring connections and their positions are shown and classified by code according to the connection method. (Refer to the section, “How to use this manual”). The “System Outline” and “Service Hints” useful for troubleshooting are also contained in this section.
	GROUND POINTS	Shows ground positions of all parts described in this manual.
12	OVERALL WIRING DIAGRAM	Provides circuit diagrams showing the circuit connections.

This manual provides information on the electrical circuits installed on vehicles by dividing them into each system circuit.

The actual wiring of each system circuit is shown from the point where the power source is received from the battery as far as each ground point. (All circuit diagrams are shown with the switches in the OFF position.)

When troubleshooting any problem, first understand the operation of the circuit where the problem was detected (see System Circuit section), the power source supplying power to that circuit (see Power Source section), and the ground points (see Ground Points section). See the System Outline to understand the circuit operation.

When the circuit operation is understood, begin troubleshooting of the problem circuit to isolate the cause. Use Relay Location and Electrical Wire Routing sections to find each part, junction block and wiring harness connectors, wiring harness and wiring harness connectors, and ground points of each system circuit. Internal wiring for each junction block is also provided for better understanding of connection within a junction block.

Wiring related to each system is indicated in each system circuit by arrows (from __ , to __). When overall connections are required, see the Overall Wiring Diagram at the end of this manual.

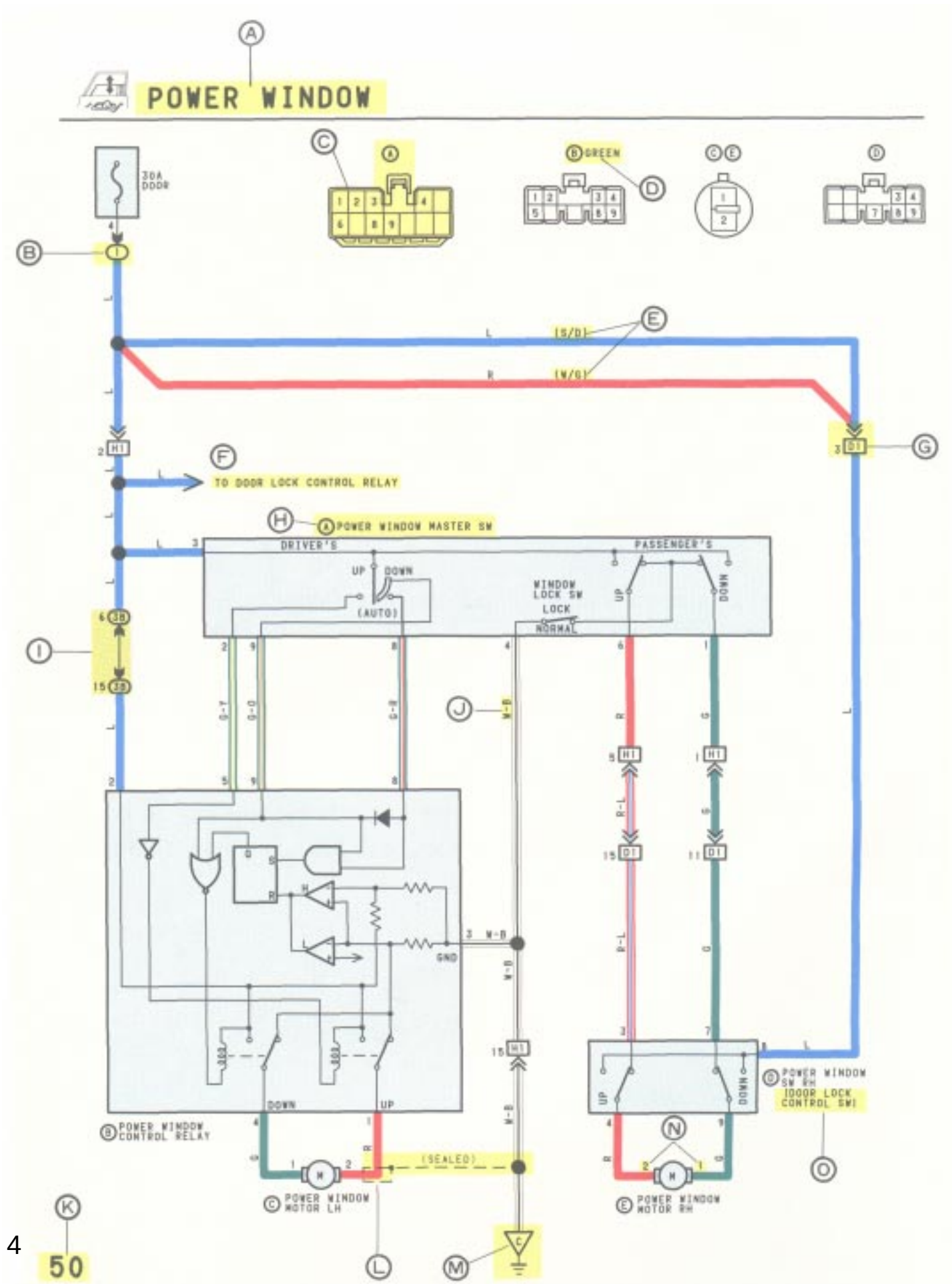
POWER WINDOW
30A DOOR
GREEN
(S/D)
(W/G)
TO DOOR LOCK CONTROL RELAY
POWER WINDOW MASTER SW
DRIVER'S
PASSENGER'S
UP
DOWN
(AUTO)
WINDOW LOCK SW
LOCK
NORMAL
GND
POWER WINDOW CONTROL RELAY
(SEALED)
POWER WINDOW MOTOR LH
POWER WINDOW MOTOR RH
POWER WINDOW SW RH
(DOOR LOCK CONTROL SW)
50

Ⓐ : System Title

Ⓑ : Indicates a Relay Block. No shading is used and only the Relay Block No. is shown to distinguish it from the J/B.

Example: Indicates Relay Block No. 1.

Ⓒ : Indicates the connector to be connected to a part (the numeral indicates the pin No.)

Ⓓ : Connector Color

Connectors not indicated are milky white in color.

Ⓔ : ( ) is used to indicate different wiring and connector, etc. when the vehicle model, engine type, or specification is different.

Ⓕ : Indicates related system.

Ⓖ : Indicates the wiring harness and wiring harness connector. The wiring harness with male terminal is shown with arrows (⩔).

Outside numerals are pin numbers.

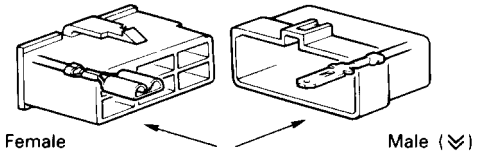

Ⓗ : Represents a part (all parts are shown in sky blue). The code (e.g.) is the same as the code used in parts position.

Ⓘ : Junction Block (The number in the circle is the J/B No. and the connector code is shown beside it). Junction Blocks are shaded to clearly separate them from other parts (different junction blocks are shaded differently for further clarification).

Example:

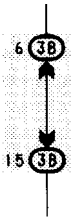

3B indicates that it is inside Junction Block No. 3.

Ⓙ : Indicates the wiring color.

Wire colors are indicated by an alphabetical code.

B	=	Black	L	=	Blue	R	=	Red
BR	=	Brown	LG	=	Light Green	V	=	Violet
G	=	Green	O	=	Orange	W	=	White
GR	=	Gray	P	=	Pink	Y	=	Yellow

The first letter indicates the basic wire color and the second letter indicates the color of the stripe.

Example: L – Y

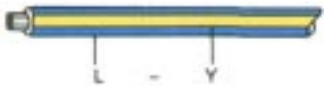

(Blue) (Yellow)

Ⓚ : Page No.

Ⓛ : Indicates a sealed wiring harness.

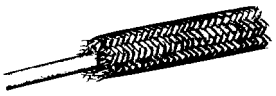

Ⓜ : Indicates a ground point.

Ⓝ : Indicates the pin number of the connector.

The numbering system is different for female and male connectors.

Example:

Numbered in order from upper left to lower right

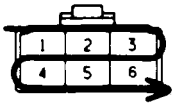

Female

Numbered in order from upper right to lower left

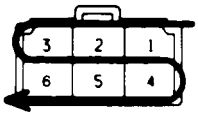

Male

The numbering system for the overall wiring diagram is the same as above.

Ⓞ : When 2 parts both use one connector in common, the parts connector name used in the wire routing section is shown in square brackets [ ].

Ⓟ

SYSTEM OUTLINE

WITH THE IGNITION SW TURNED ON, THE CURRENT FLOWS TO TERMINAL 3 OF THE POWER WINDOW MASTER SW, TERMINAL 2 OF THE POWER WINDOW CONTROL RELAY AND TERMINAL 8 OF THE POWER WINDOW SW THROUGH THE DOOR FUSE.

1. DRIVER'S WINDOW "MANUAL UP" OPERATION BY MASTER SW

HOLDING MANUAL SW (DRIVER'S) ON "UP" POSITION LOCATED IN POWER WINDOW MASTER SW, THE CURRENT FLOWS TO TERMINAL 5 OF THE POWER WINDOW CONTROL RELAY THROUGH TERMINAL 3 OF THE MASTER SW → TERMINAL 2 TO OPERATE A POWER WINDOW CONTROL RELAY. THUS THE CURRENT INSIDE THE RELAY FLOWS FROM TERMINAL 2 OF THE RELAY → TERMINAL 1 → TERMINAL 2 OF THE POWER WINDOW MOTOR → TERMINAL 1 → TERMINAL 4 OF THE RELAY → TERMINAL 3 → TO GROUND. THE MOTOR TURNS TO RAISE THE WINDOW. RELEASING THIS SW, THE ROTATION OF MOTOR IS STOPPED AND THE WINDOWS STOP AT DESIRED POINT.

(FOR THE "MANUAL DOWN" OPERATION, CURRENT FLOWS IN THE REVERSE DIRECTION BECAUSE THE TERMINALS WHERE IT FLOWS ARE CHANGED).

2. DRIVER'S WINDOW "AUTO DOWN" OPERATION BY MASTER SW

ONCE THE "AUTO DOWN" BUTTON OF THE MASTER SW IS PUSHED, THE CURRENT FLOWS TERMINAL 9 OF THE POWER WINDOW CONTROL RELAY THROUGH TERMINAL 3 OF THE MASTER SW → TERMINALS 8 AND 9 TO OPERATE THE RELAY. THUS THE CURRENT INSIDE THE POWER WINDOW CONTROL RELAY FLOWS FROM TERMINAL 2 OF THE RELAY → TERMINAL 4 → TERMINAL 1 OF THE POWER WINDOW MOTOR → TERMINAL 2 → TERMINAL 1 OF THE RELAY → TERMINAL 3 → TO GROUND. THE MOTOR CONTINUES TO ROTATE, ENABLING THEWINDOW TO DESCEND.

WHEN THE WINDOW DESCENDS TO THE END POSITION, THE CURRENT IS CUT OFF TO RELEASE THE AUTO DOWN FUNCTION BASED ON THE INCREASING CURRENT BETWEEN TERMINAL 2 OF THE RELAY AND TERMINAL 1 IN RELAY.

3. DRIVER'S WINDOW AUTO DOWN RELEASE OPERATION BY MASTER SW

BY HOLDING THE MANUAL SW (DRIVER'S) IN "UP" POSITION WHILE OPERATING AUTO DOWN. THE CURRENT FROM TERMINAL 3 OF THE MASTER SW PASSING THROUGH TERMINAL 2 FLOWS TO TERMINAL 5 OF THE RELAY AND RELEASES THE AUTO DOWN FUNCTION IN THE POWER WINDOW CONTROL RELAY. RELEASING THE HAND FROM SW, STOPS THE WINDOW AND CONTINUING TO TOUCH THE SW, SWITCHES THE FUNCTION TO MANUAL UP OPERATION.

4. PASSENGER'S WINDOW UP OPERATION (MASTER SW) AND WINDOW LOCK SW OPERATION

HOLDING PASSENGER'S WINDOW SW (MASTER SW) ON "UP", THE CURRENT FLOWS FROM TERMINAL 3 OF THE MASTER SW THROUGH TERMINAL 6 TO TERMINAL 3 OF THE POWER WINDOW SW (PASSENGER'S) → TERMINAL 4 → TERMINAL 2 OF THE MOTOR → TERMINAL 1 → TERMINAL 9 OF THE POWER WINDOW SW → TERMINAL 7 → TERMINAL 1 OF THE MASTER SW → TERMINAL 4 TO GROUND. THE MOTOR RUNS TO RAISE THE WINDOW. RELEASING THIS SW, THE ROTATION OF MOTOR IS STOPPED AND WINDOW STOPS AT THE DESIRED POINT.

SWITCHING THE WINDOW LOCK SW IN "LOCK" POSITION, THE CIRCUIT IS OPENED AND STOPS THE MOTOR ROTATION.

(FOR THE DOWN OPERATION, CURRENT FLOWS IN THE REVERSE DIRECTION BECAUSE THE TERMINALS WHERE IT FLOWS ARE CHANGED).

5. PASSENGER'S WINDOW DOWN OPERATION (POWER WINDOW SW)

HOLDING POWER WINDOW SW ON "DOWN", THE CURRENT FLOWS FROM TERMINAL 8 OF THE POWER WINDOW SW → TERMINAL 9 → TERMINAL 1 OF THE MOTOR → TERMINAL 2 → TERMINAL 4 OF THE POWER WINDOW SW → TERMINAL 3 → TERMINAL 6 OF THE MASTER SW → TERMINAL 4 → TO GROUND. THE MOTOR RUNS TO LOWER THE WINDOW.

(FOR THE UP OPERATION, CURRENT FLOWS IN THE REVERSE DIRECTION BECAUSE THE TERMINALS WHERE IT FLOWS ARE CHANGED).

Ⓠ

SERVICE HINTS

(A) POWER WINDOW MASTER SW

4–GROUND: ALWAYS CONTINUITY

3–GROUND: APPROX. **12** VOLTS WITH IGNITION SW AT **ON** POSITION

(B) POWER WINDOW CONTROL RELAY

3–GROUND: ALWAYS CONTINUITY

2–GROUND: APPROX. **12** VOLTS WITH IGNITION SW AT **ON** POSITION

5–GROUND: APPROX. **12** VOLTS WITH IGNITION SW AT **ON** POSITION AND MASTER SW AT **UP** POSITION

8–GROUND: APPROX. **12** VOLTS WITH IGNITION SW AT **ON** POSITION AND MASTER SW AT **AUTO DOWN** POSITION

9–GROUND: APPROX. **12** VOLTS WITH IGNITION SW AT **ON** POSITION AND MASTER SW AT **DOWN** OR **AUTO DOWN** POSITION

WINDOW LOCK SW

OPEN WITH WINDOW LOCK SW AT **LOCK** POSITION

Ⓡ

○ : PARTS LOCATION

CODE		SEE PAGE	CODE		SEE PAGE	CODE		SEE PAGE
A	P4	21	**C**	P5	21	**E**	P6	21
B	P2	21	**D**	P3	21			

Ⓢ

▭ : RELAY BLOCKS

CODE	SEE PAGE	RELAY BLOCK (RELAY BLOCK LOCATION)
1	16	R/B NO. 1 (INSTRUMENT PANEL LEFT)

Ⓣ

▭ : JUNCTION BLOCK AND WIRE HARNESS CONNECTOR

CODE	SEE PAGE	JUNCTION BLOCK AND WIRE HARNESS (CONNECTOR LOCATION)
3B	14	J/B NO. 3 AND COWL WIRE (INSTRUMENT PANEL LEFT SIDE)

Ⓤ

▭ : CONNECTOR JOINING WIRE HARNESS AND WIRE HARNESS

CODE	SEE PAGE	JOINING WIRE HARNESS AND WIRE HARNESS (CONNECTOR LOCATION)
D1	26	FRONT DOOR RH WIRE AND COWL WIRE (RIGHT KICK PANEL)
H1	26	FRONT DOOR LH WIRE AND COWL WIRE (LEFT KICK PANEL)

Ⓥ

▽ : GROUND POINTS

CODE	SEE PAGE	GROUND POINT LOCATION
C	24	COWL LEFT

Ⓟ : Explains the system outline.

Ⓠ : Indicates values or explains the function for reference during troubleshooting.

Ⓡ : Indicates the reference page showing the position on the vehicle of the parts in the system circuit.

Example: Part A (Power Window Master SW) represents code P4 on page 21 of the manual.

* The letter in the code is from the first letter of the part, and the number indicates its order in parts starting with that letter.

Example: P 4

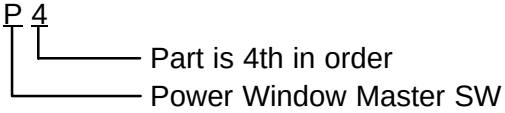

Ⓢ : Indicates the reference page showing the position on the vehicle of Relay Block Connectors in the system circuit.

Example: Connector 1 is described on page 16 of this manual and is installed on the left side of the instrument panel.

Ⓣ : Indicates the reference page showing the position on the vehicle of J/B and Wire Harness in the system circuit.

Example: Connector 3B connects the Cowl Wire and J/B No. 3. It is described on page 14 of this manual, and is installed on the instrument panel left side.

Ⓤ : Indicates the reference page describing the wiring harness and wiring harness connector (the female wiring harness is shown first, followed by the male wiring harness).

Example: Connector D1 connects the front door RH wire (female) and cowl wire (male). It is described on page 26 of this manual, and is installed on the right side kick panel.

Ⓥ : Indicates the reference page showing the position of the ground points on the vehicle.

Example: Ground point C is described on page 24 of this manual and is installed on the cowl left side.

The Power – Load section, describes which parts each power source (fuses, fusible links, and circuit breakers) transmits current to. In the Power Source circuit diagram, the conditions when battery power is supplied to each system are explained. Since all System Circuit diagrams start from the power source, the power source system must be fully understood.

POWER SOURCE (Power–Load, Reference)

R/B No. 1 (Left Kick Panel)

Power		Load	Page No.
7.5A	TURN-GAG	Check Engine Warning Light, Fuel Control SW, Super Charger Warning Light (4A-GZE)	42
		Cooling Fan Warning Light	62
		Turn Signal Flasher	72
		Light Retainer Relay	74
		Seat Belt Warning Light	90
		ECT Computer, Pattern Indicator	92
		Cruise Control Computer	96
		Auto Antenna Control Relay and Motor	102
		Combination Meter	104
		A/C Amplifier, Recirc/Fresh Control Servo Motor, Air Vent Mode Control Servo Motor, Heater Control Assembly, Heater Relay	107
20A	WIPER	Washer Motor, Wiper Control SW, Wiper Motor	88
30A	DOOR	Power Window Control Relay, Power Window Motor	82
15A	RAD-CIG	Remote Control Mirror	80
		Cigarette Lighter, Clock	79
		Radio and Tape Player	100, 102
		Auto Antenna Control Relay and Motor	102

POWER SOURCE

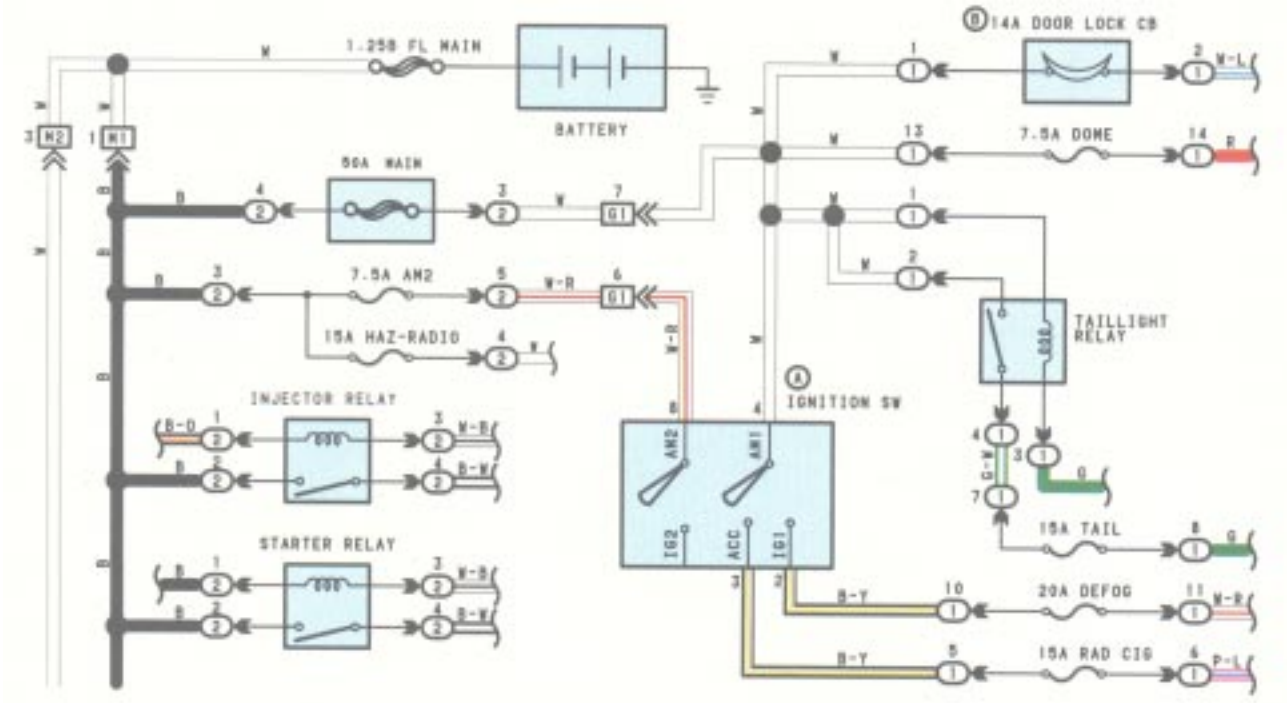

The ground points circuit diagram shows the connections from all major parts to the respective ground points. When troubleshooting a faulty ground point, checking the system circuits which use a common ground may help you identify the problem ground quickly. The relationship between ground points (A , B , and C shown below) can also be checked this way.

GROUND POINTS

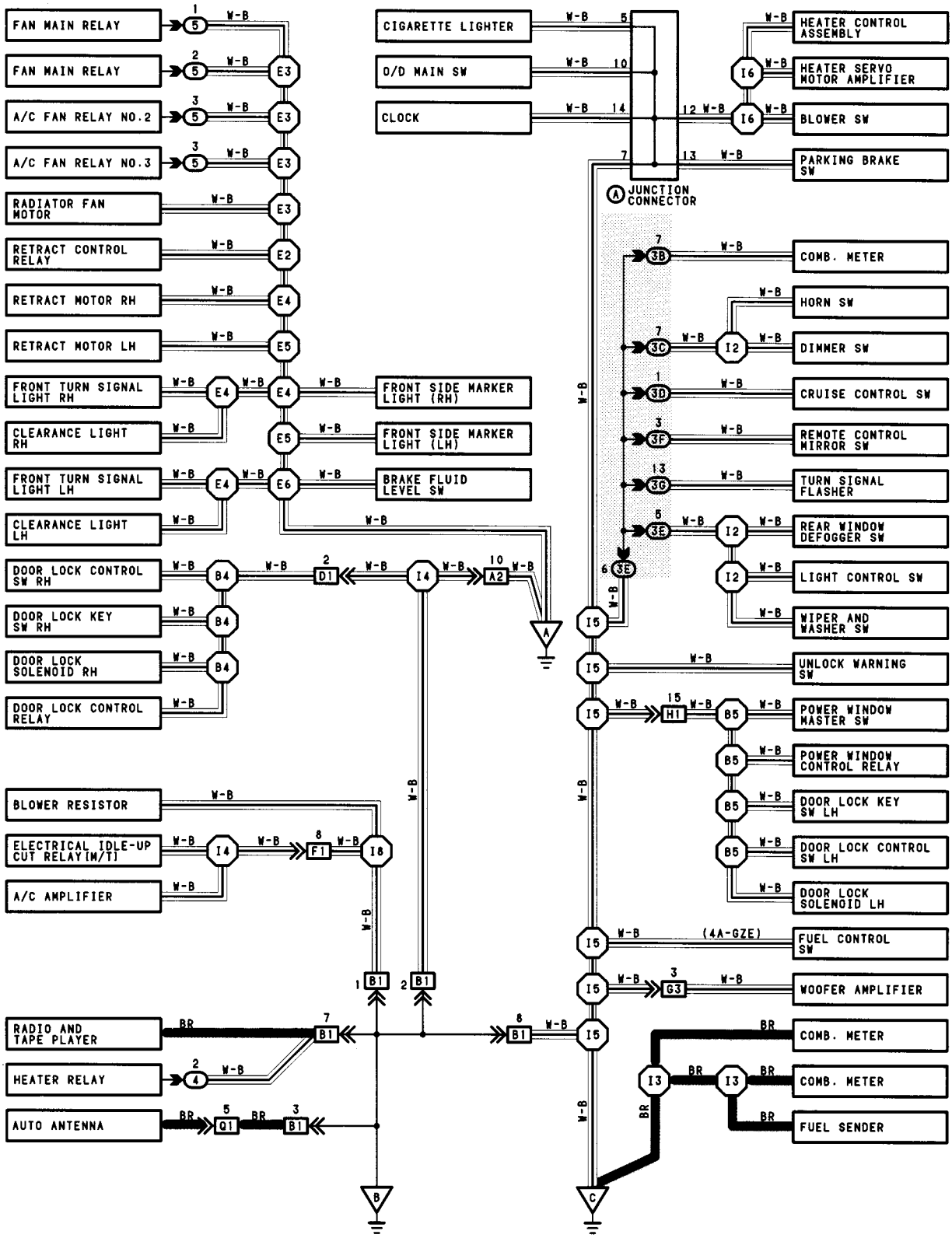

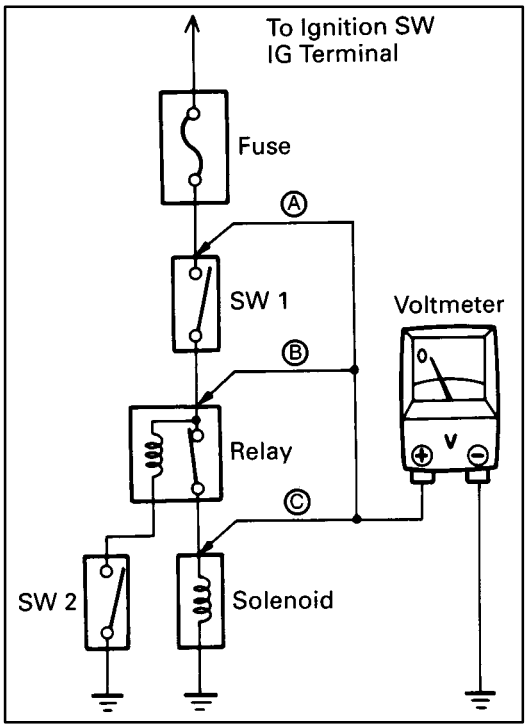

VOLTAGE CHECK

(a) Establish conditions in which voltage is present at the check point.

Example:

Ⓐ – Ignition SW on

Ⓑ – Ignition SW and SW 1 on

Ⓒ – Ignition SW, SW 1 and Relay on (SW 2 off)

(b) Using a voltmeter, connect the negative lead to a good ground point or negative battery terminal, and the positive lead to the connector or component terminal. This check can be done with a test light instead of a voltmeter.

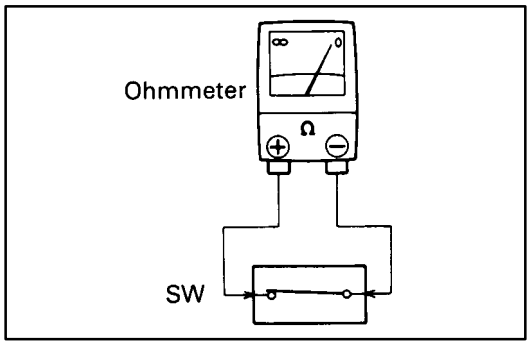

CONTINUITY AND RESISTANCE CHECK

(a) Disconnect the battery terminal or wire so there is no voltage between the check points.

(b) Contact the two leads of an ohmmeter to each of the check points.

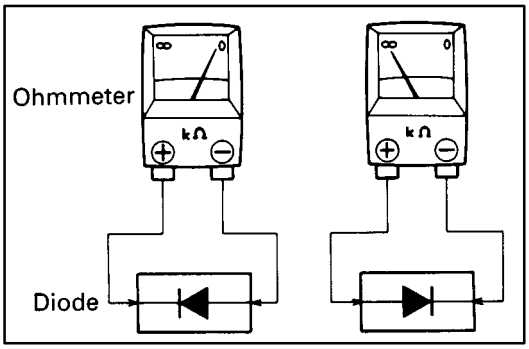

If the circuit has diodes, reverse the two leads and check again.

When contacting the negative lead to the diode positive side and the positive lead to the negative side, there should be continuity.

When contacting the two leads in reverse, there should be no continuity.

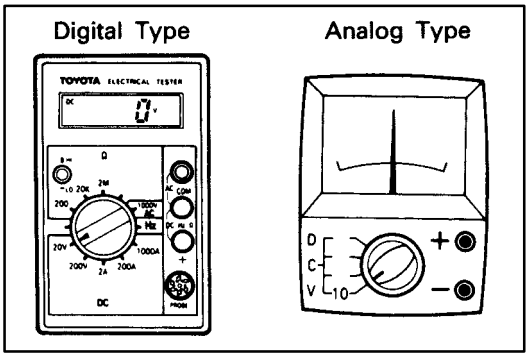

(c) Use a volt/ohmmeter with high impedance (10 kΩ/V minimum) for troubleshooting of the electrical circuit.

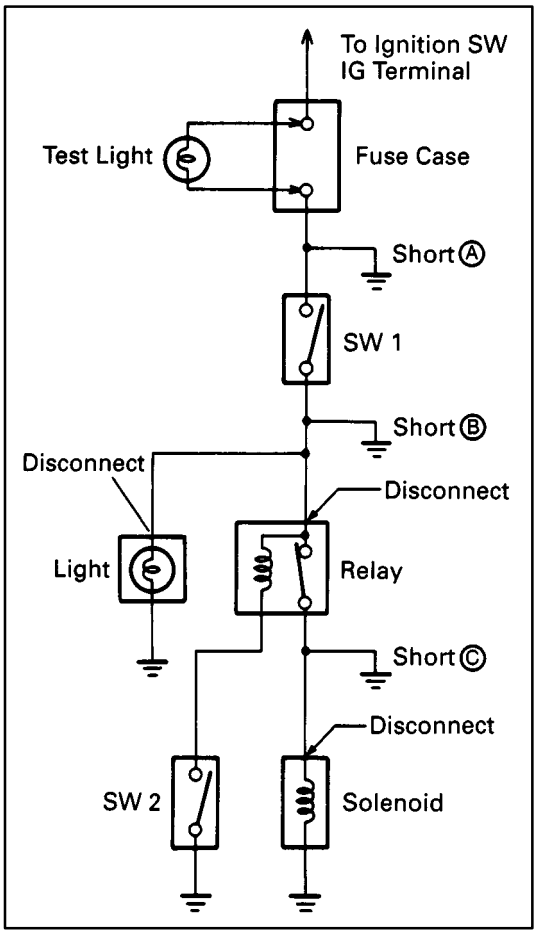

FINDING A SHORT CIRCUIT

(a) Remove the blown fuse and disconnect all loads of the fuse.

(b) Connect a test light in place of the fuse.

(c) Establish conditions in which the test light comes on.

Example:

Ⓐ – Ignition SW on

Ⓑ – Ignition SW and SW 1 on

Ⓒ – Ignition SW, SW 1 and Relay on (Connect the Relay) and SW 2 off (or Disconnect SW 2)

(d) Disconnect and reconnect the connectors while watching the test light.

The short lies between the connector where the test light stays lit and the connector where the light goes out.

(e) Find the exact location of the short by lightly shaking the problem wire along the body.

CAUTION:

Do not open the cover or the case of the ECU and various computer unless absolutely necessary. (If the IC terminals are touched, the IC may be destroyed by static electricity.)

DISCONNECTION OF MALE AND FEMALE CONNECTORS

To pull apart the connectors, pull on the connector itself, not the wire harness.

HINT: Check to see what kind of connector you are disconnecting before pulling apart.

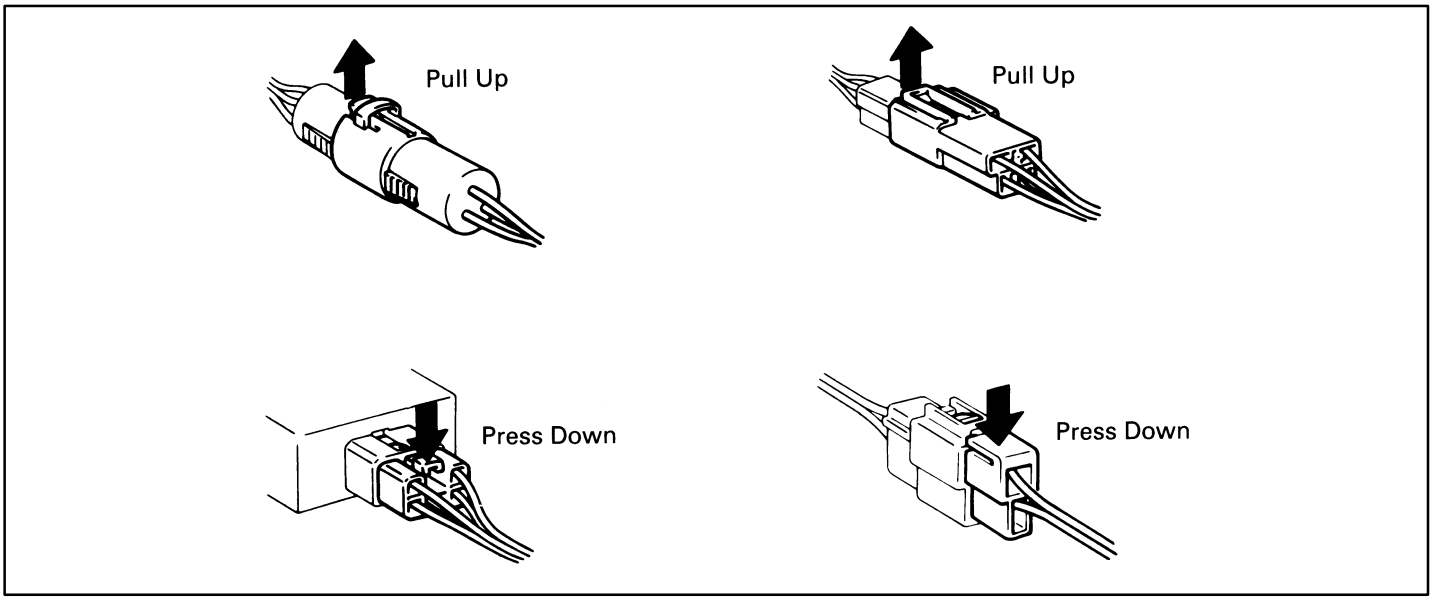

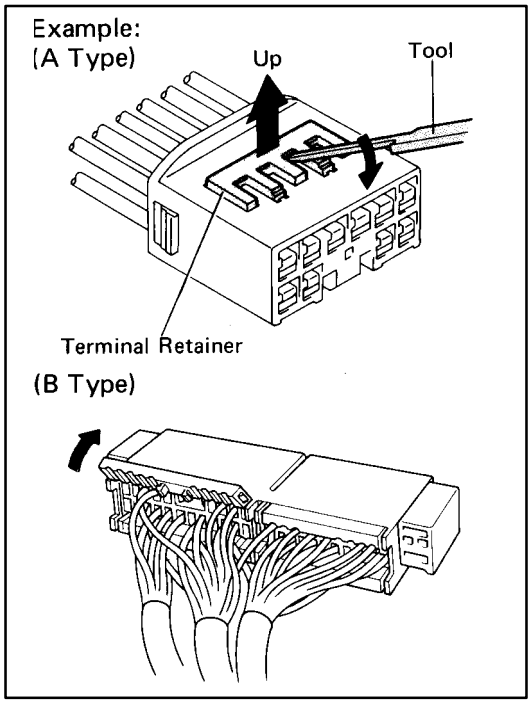

HOW TO REPLACEMENT FOR TERMINAL (with Terminal Retainer Type)

1. DISCONNECT CONNECTOR

2. DISCONNECT TERMINAL FROM CONNECTOR

   (a) “for A type”

   Raise the terminal retainer up to the temporally lock position.

   HINT: The needle insertion position varies according to the connector’s shape (number of terminals etc.), so check the position before inserting it.

   “for B type”

   Open the terminal retainer.

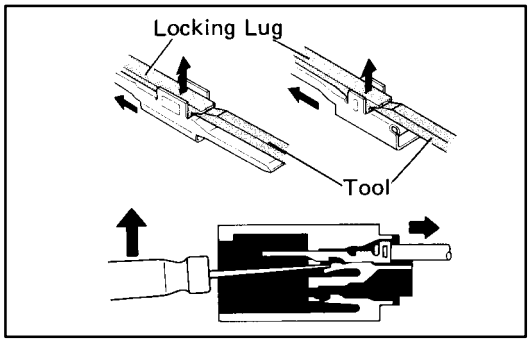

   (b) Release the locking lug from terminal and pull the terminal out from rear.

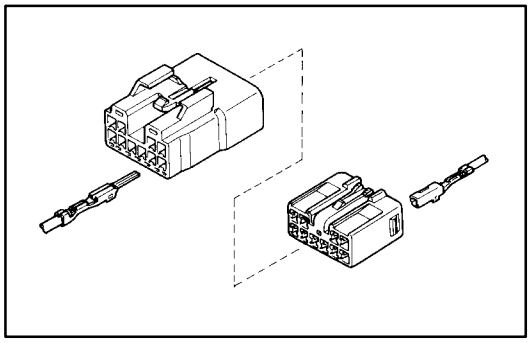

3. INSTALL TERMINAL TO CONNECTOR

   (a) Insert the terminal.

   HINT:

   1. Make sure the terminal is positioned correctly.
   2. Insert the terminal until the locking lug locks firmly.
   3. Insert the terminal with terminal retainer in the temporally lock position.

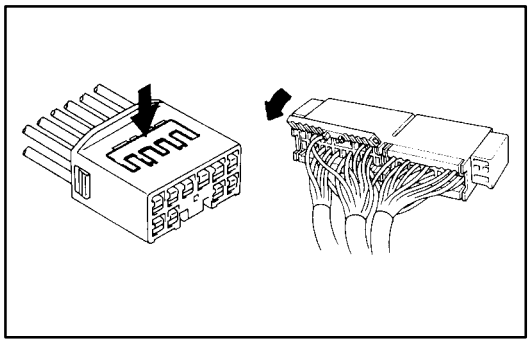

   (b) Push the terminal retainer in to the full lock position.

4. CONNECT CONNECTOR

ABBREVIATIONS

The following abbreviations are used in this manual.

A/C	=	Air Conditioner
A.B.S	=	Anti Lock Brake System
A/T	=	Automatic Transmission
CB	=	Circuit Breaker
COMB.	=	Combination
DIFF.	=	Differential
ECT	=	Electronic Controlled Transmission
ECU	=	Electronic Control Unit
EFI	=	Electronic Fuel Injection
EGR	=	Exhaust Gas Recirculation
EX.	=	Except
FL	=	Fusible Link
ISC	=	Idle Speed Control
J/B	=	Junction Block
LH	=	Left-Hand
M/T	=	Manual Transmission
O/D	=	Overdrive
R/B	=	Relay Block
RH	=	Right–Hand
SW	=	Switch
TCCS	=	Toyota Computer Controlled System
TEMP.	=	Temperature
VSV	=	Vacuum Switching Valve
W/G	=	Wagon Type
W/	=	With
W/O	=	Without
4WD	=	Four Wheel Drive

GLOSSARY OF TERMS AND SYMBOLS

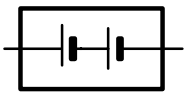

BATTERY

Stores chemical energy and converts it into electrical energy. Provides DC current for the auto's various electrical circuits.



CAPACITOR (Condenser)

A small holding unit for temporary storage of electrical voltage.



CIGARETTE LIGHTER

An electric resistance heating element.

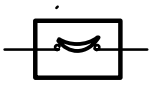

CIRCUIT BREAKER

Basically a reusable fuse, a circuit breaker will heat and open if too much current flows through it. Some units automatically reset when cool, others must be manually reset.



DIODE

A semiconductor which allows current flow in only one direction.



DIODE, ZENER

A diode which allows current flow in one direction but blocks reverse flow only up to a specific voltage. Above that potential, it passes the excess voltage. This acts as a simple voltage regulator.



DISTRIBUTOR, IIA

Channels high–voltage current from the ignition coil to the individual spark plugs.



FUSE

A thin metal strip which burns through when too much current flows through it, thereby stopping current flow and protecting a circuit from damage.



FUSIBLE LINK

A heavy–gauge wire placed in high amperage circuits which burns through on overloads, thereby protecting the circuit.



GROUND

The point at which wiring attaches to the Body, thereby providing a return path for an electrical circuit; without a ground, current cannot flow.

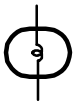

HEADLIGHTS

1. SINGLE FILAMENT



2. DOUBLE FILAMENT

Current flow causes a headlight filament to heat up and emit light. A headlight may have either a single (1) filament or a double (2) filament.

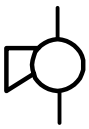

HORN

An electric device which sounds a loud audible signal.

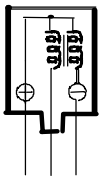

IGNITION COIL

Converts low–voltage DC current into high–voltage ignition current for firing the spark plugs.



LIGHT

Current flow through a filament causes the filament to heat up and emit light.



LED (LIGHT EMITTING DIODE)

Upon current flow, these diodes emit light without producing the heat of a comparable light.



METER, ANALOG

Current flow activates a magnetic coil which causes a needle to move, thereby providing a relative display against a background calibration.



METER, DIGITAL

Current flow activates one or many LED's, LCD's, or flourescent displays, which provide a relative or digital display.



MOTOR

A power unit which converts electrical energy into mechanical energy, especially rotary motion.

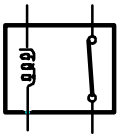

RELAY

1. NORMALLY CLOSED

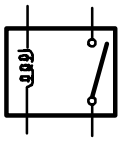

2. NORMALLY OPEN

Basically, an electrically operated switch which may be normally closed (1) or open (2).

Current flow through a small coil creates a magnetic field which either opens or closes an attached switch.

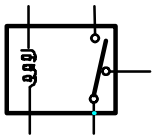

RELAY, DOUBLE THROW

A relay which passes current through one set of contacts or the other.

RESISTOR

An electrical component with a fixed resistance, placed in a circuit to reduce voltage to a specific value.



RESISTOR, TAPPED

A resistor which supplies two or more different non–adjustable resistance values.

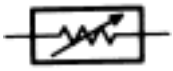

RESISTOR, VARIABLE or RHEOSTAT

A controllable resistor with a variable rate of resistance. Also called a potentiometer or rheostat.

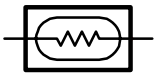

SENSOR (Thermistor)

A resistor which varies its resistance with temperature.

SENSOR, ANALOG SPEED

Uses magnetic impulses to open and close a switch to create a signal for activation of other components.

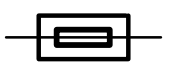

SHORT PIN

Used to provide an unbroken connection within a junction block.

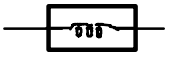

SOLENOID

An electromagnetic coil which forms a magnetic field when current flows, to move a plunger, etc.



SPEAKER

An electromechanical device which creates sound waves from current flow.

SWITCH, MANUAL

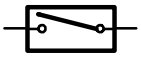

1. NORMALLY OPEN

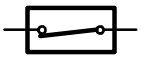

2. NORMALLY CLOSED

Opens and closes circuits, thereby stopping (1) or allowing (2) current flow.

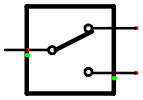

SWITCH, DOUBLE THROW

A switch which continuously passes current through one set of contacts or the other.

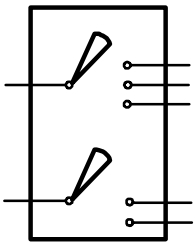

SWITCH, IGNITION

A key operated switch with several positions which allow various circuits. Particularly the primary ignition circuit, to become operational.

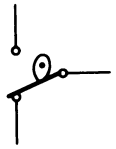

SWITCH, WIPER PARK

Automatically returns wipers to the stop position when the wiper switch is turned off.

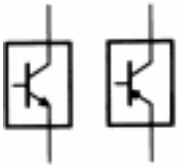

TRANSISTOR

A solidstate device typically used as an electronic relay; stops or passes current depending on the applied voltage at “base.”

WIRES



(1) NOT CONNECTED

(2) SPLICED

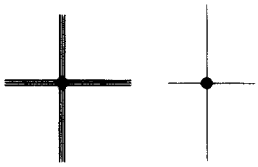

Wires are always drawn as straight lines on wiring diagrams. Crossed wires (1) without a black dot at the junction are not joined; crossed wires (2) with a black dot at the junction are spliced (joined) connections.

RELAY LOCATIONS

[Engine Compartment]

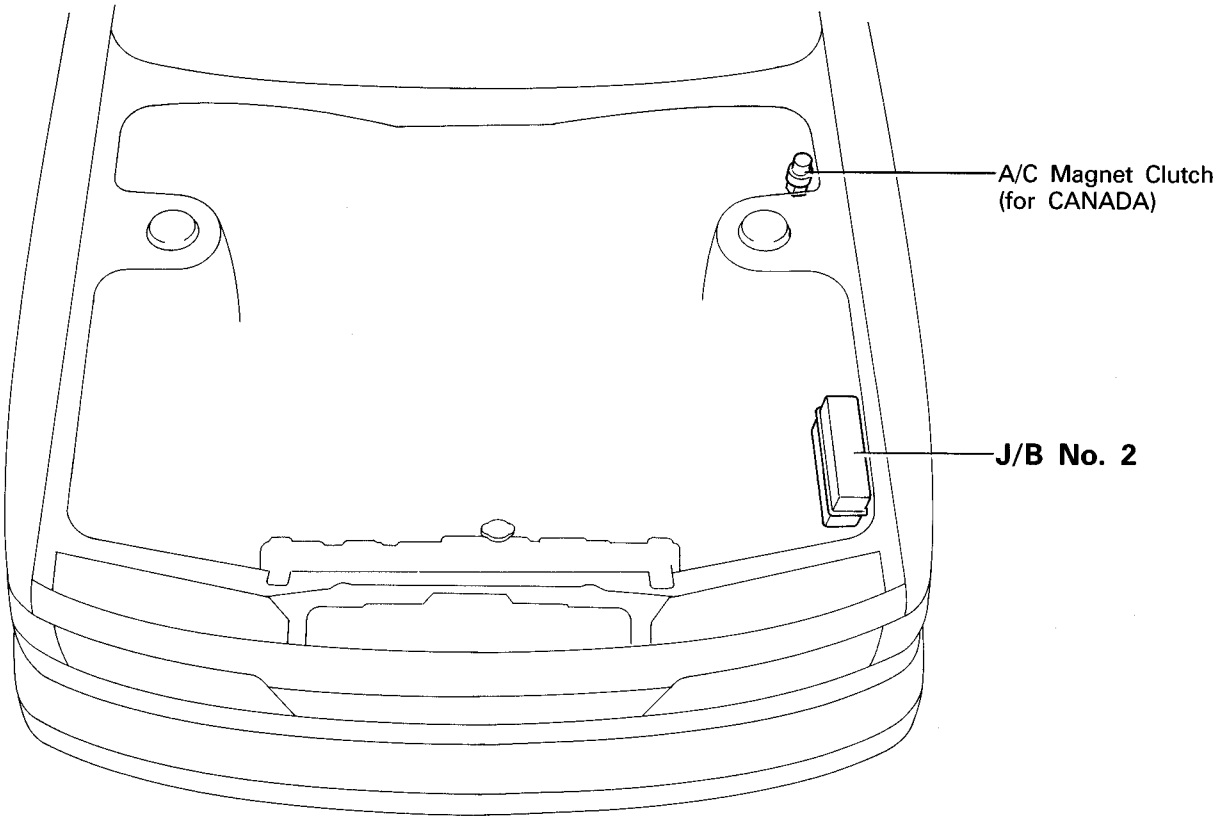

[Body]

[S/D]

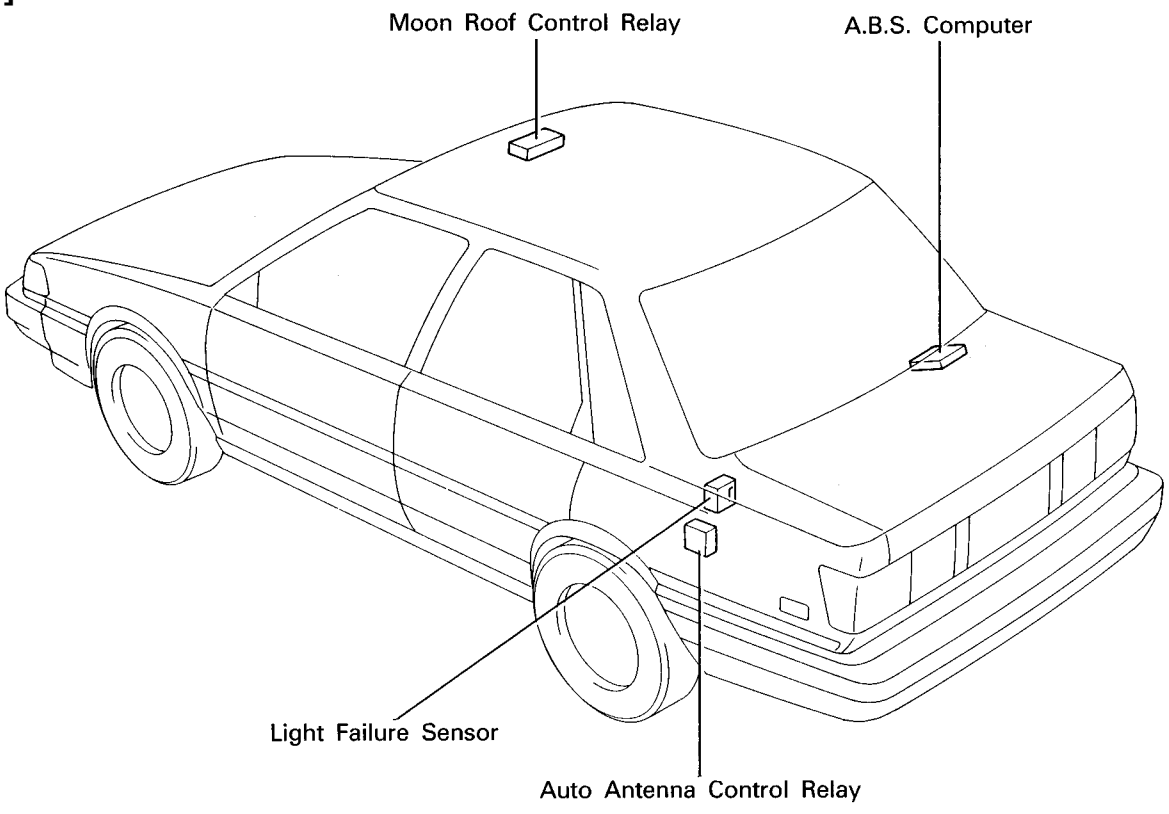

[Instrument Panel]

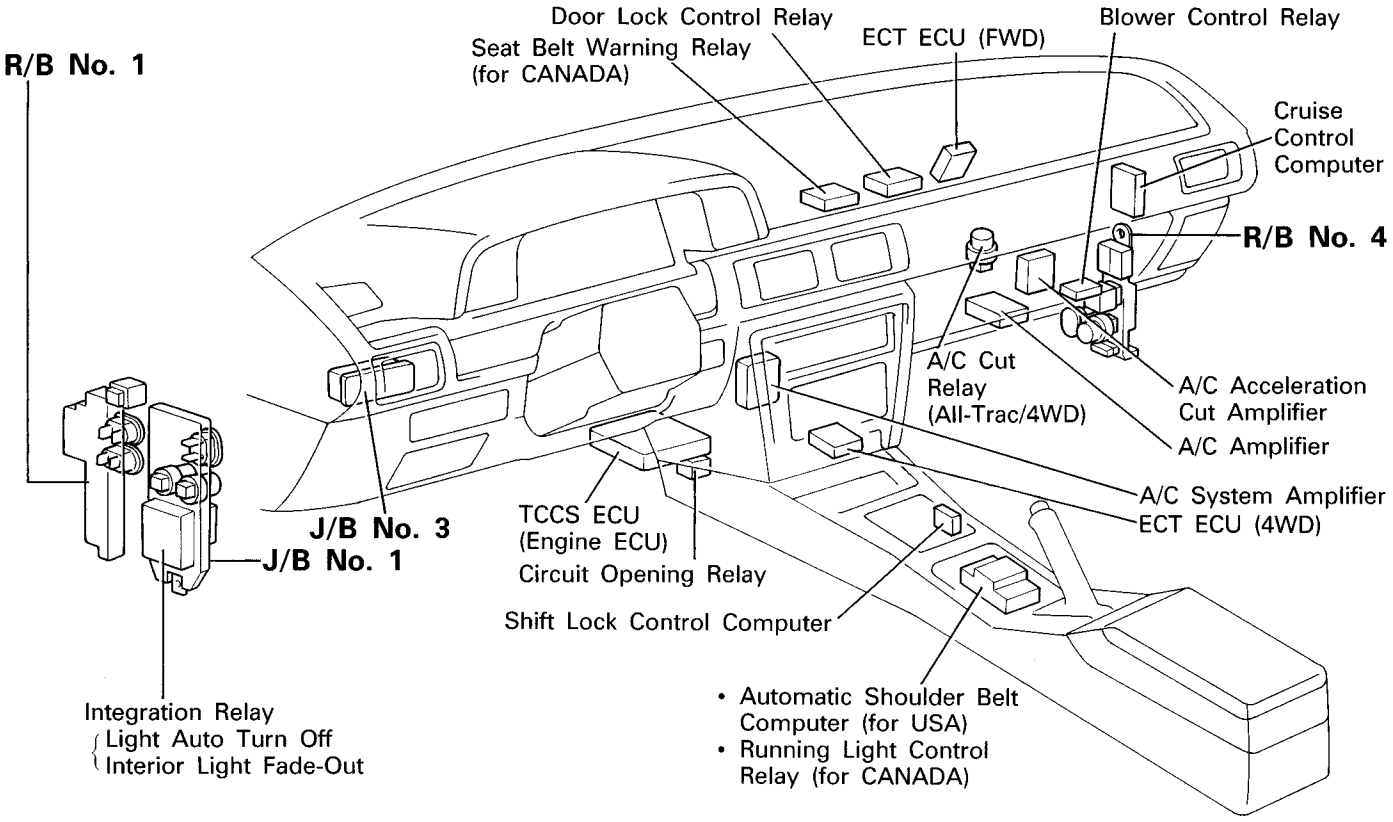

[Body]

[WAGON]

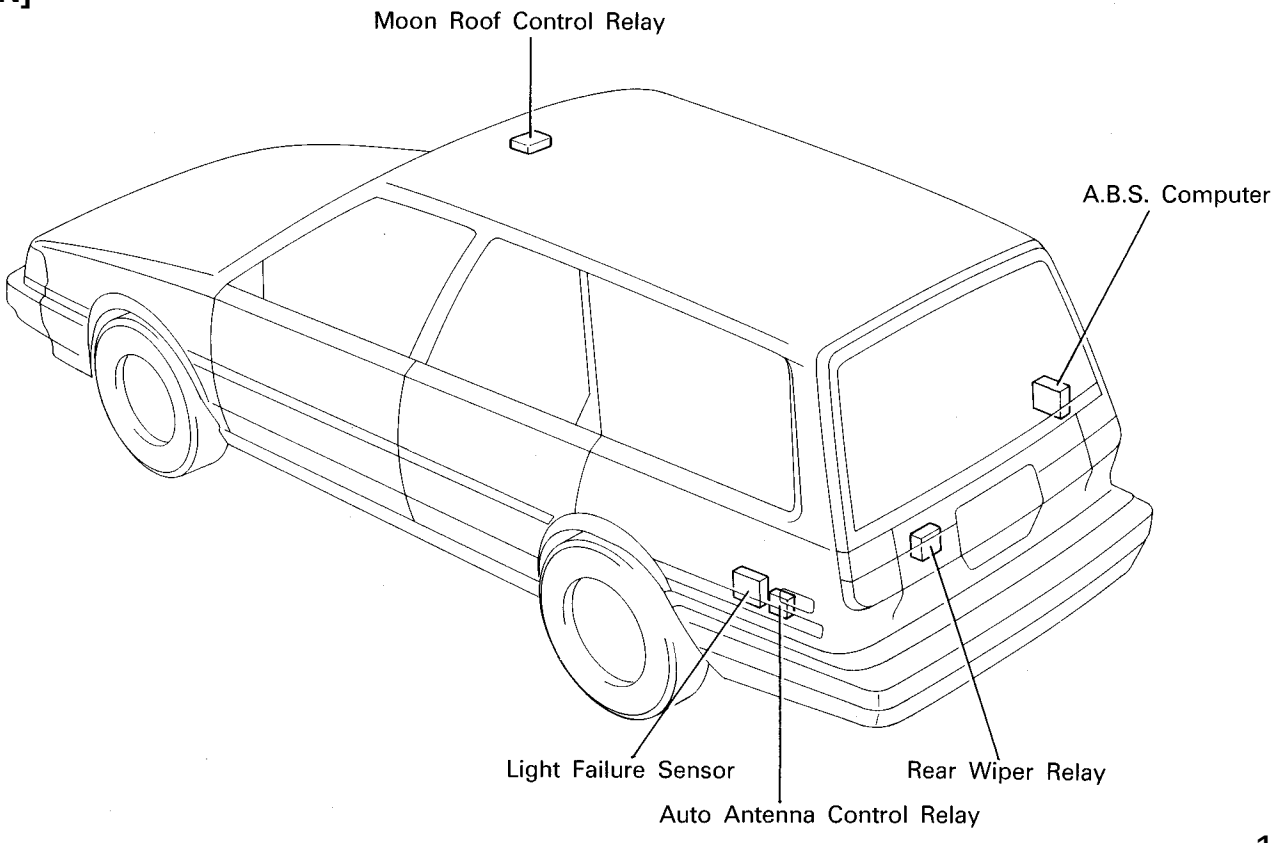

RELAY LOCATIONS

: J/B No. 1	Left Kick Panel (See Page 17)

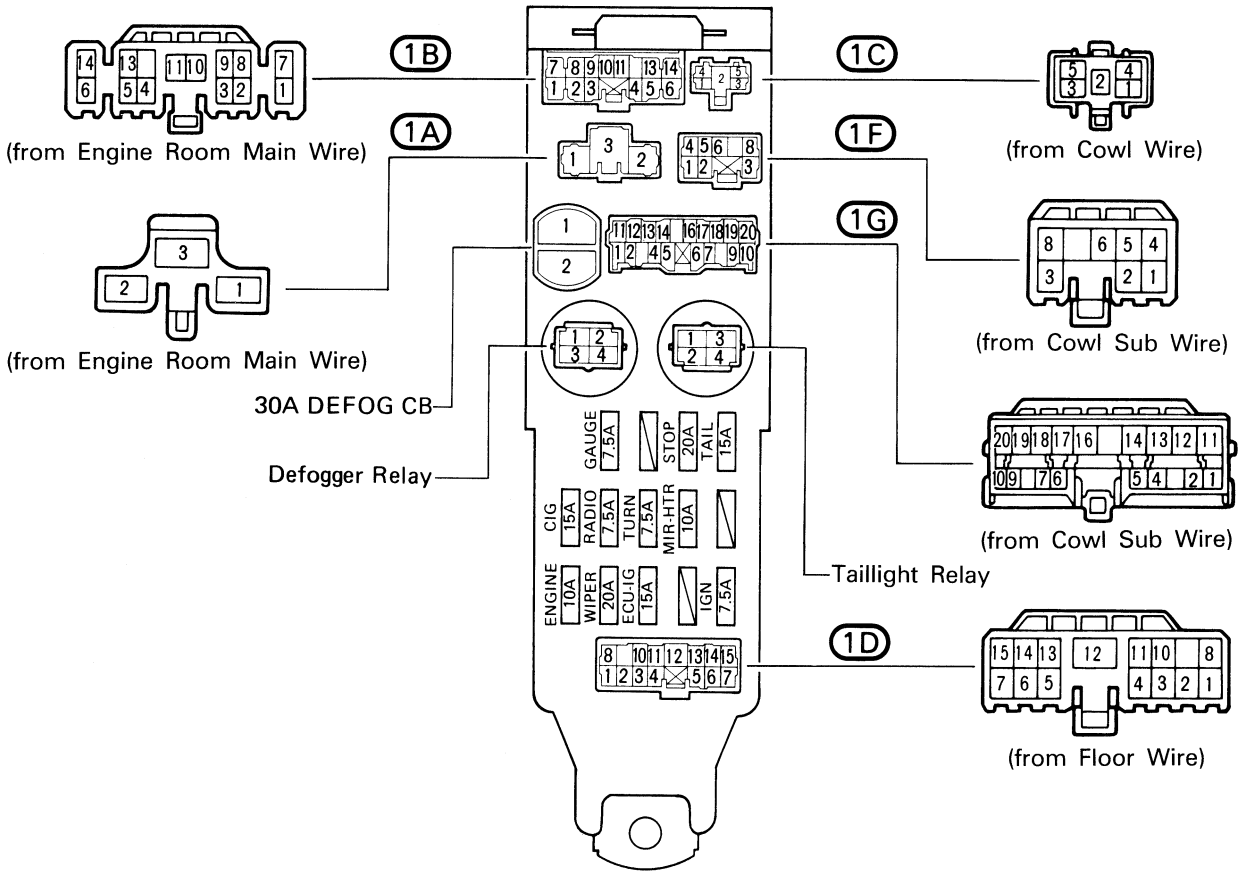

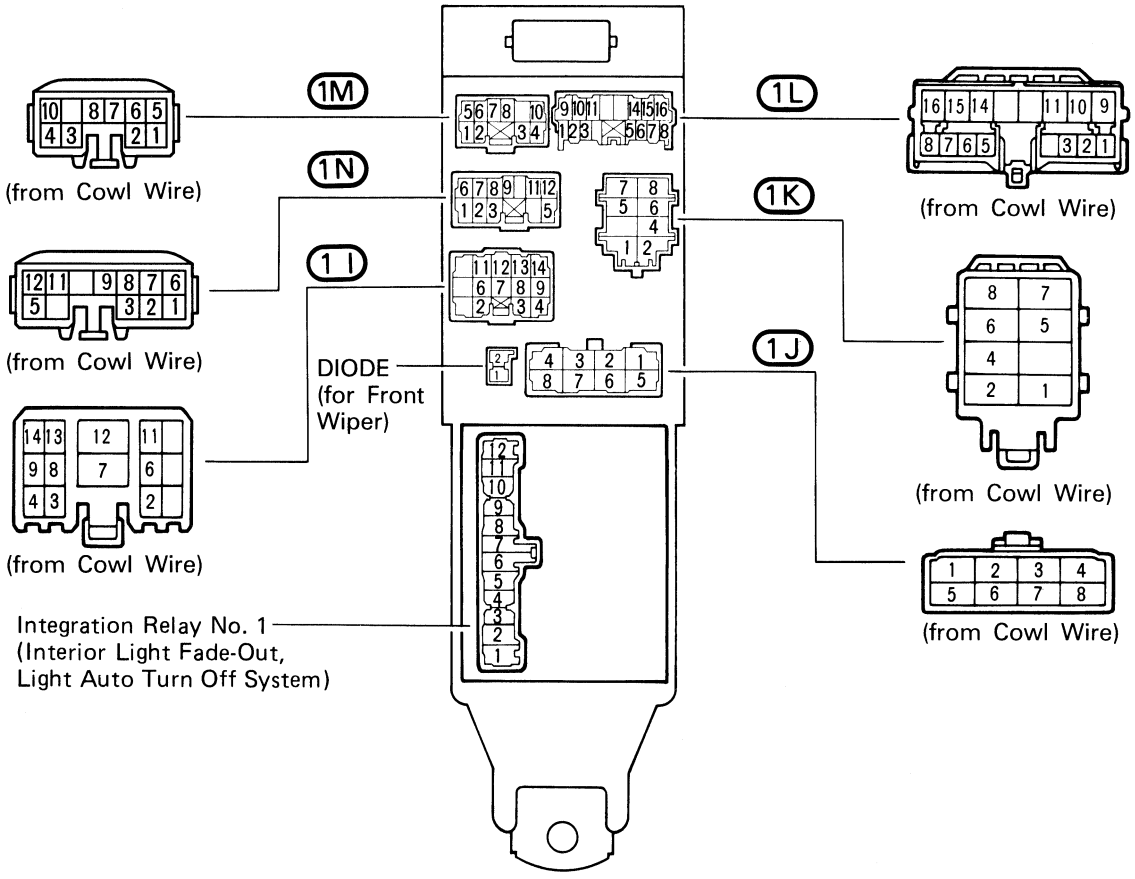

[J/B No. 1 Inner Circuit]

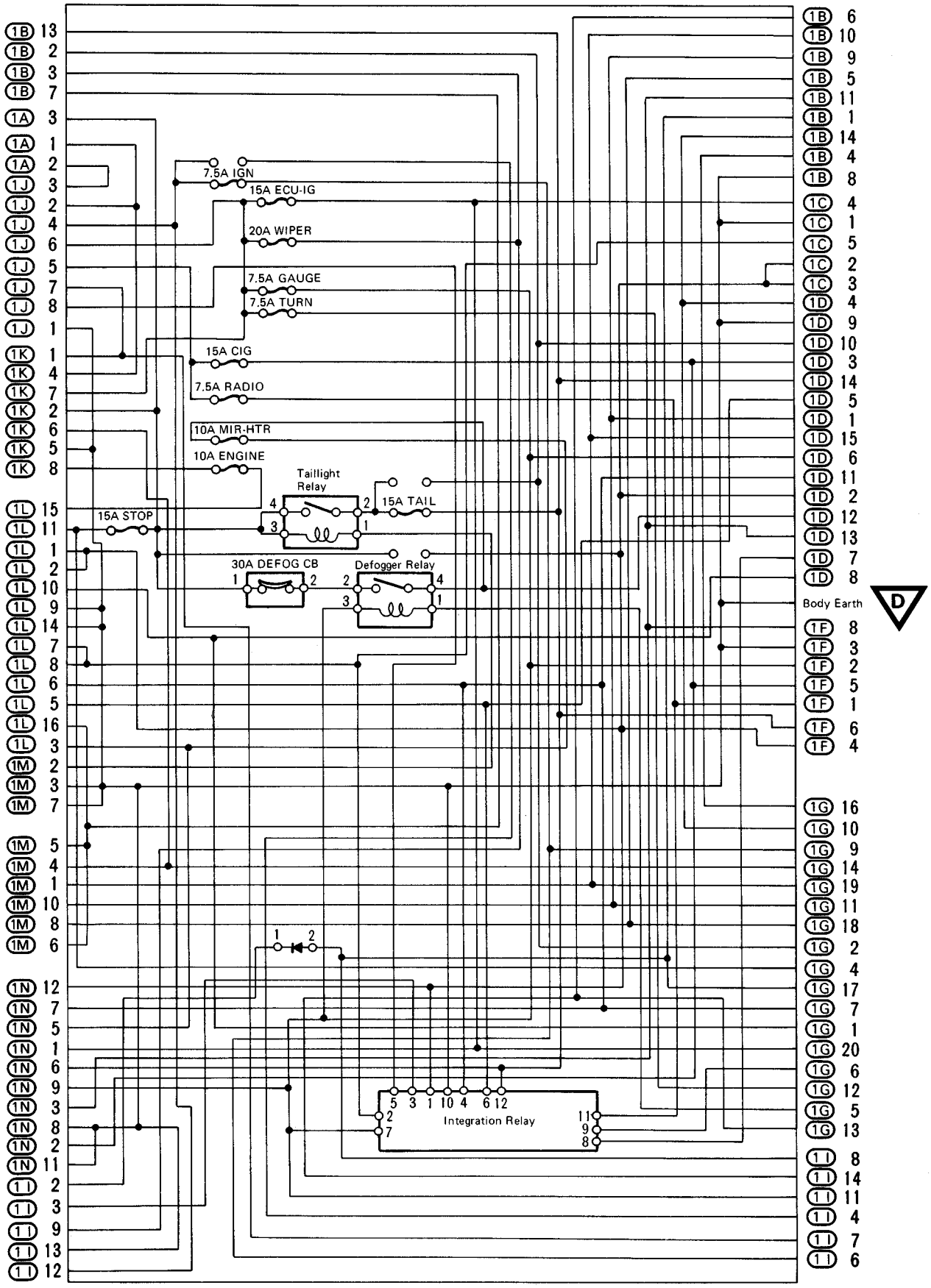

RELAY LOCATIONS

⬭ : J/B No. 2 ② : R/B No. 2	**Engine Compartment Left** (See Page 16)

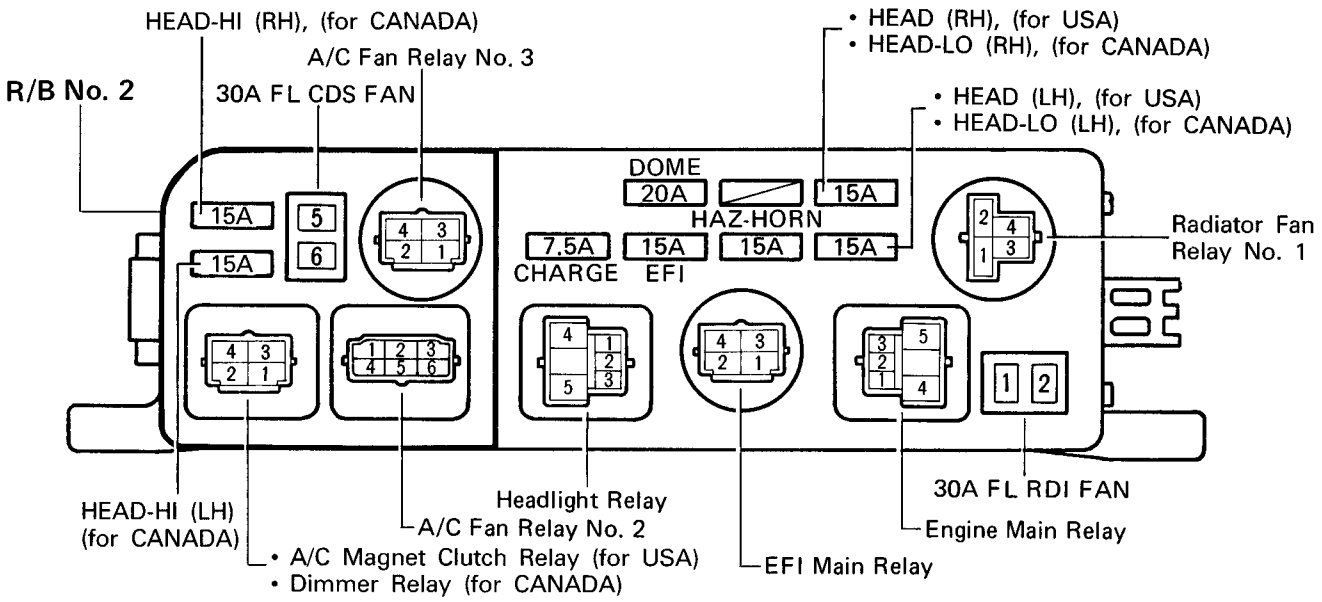

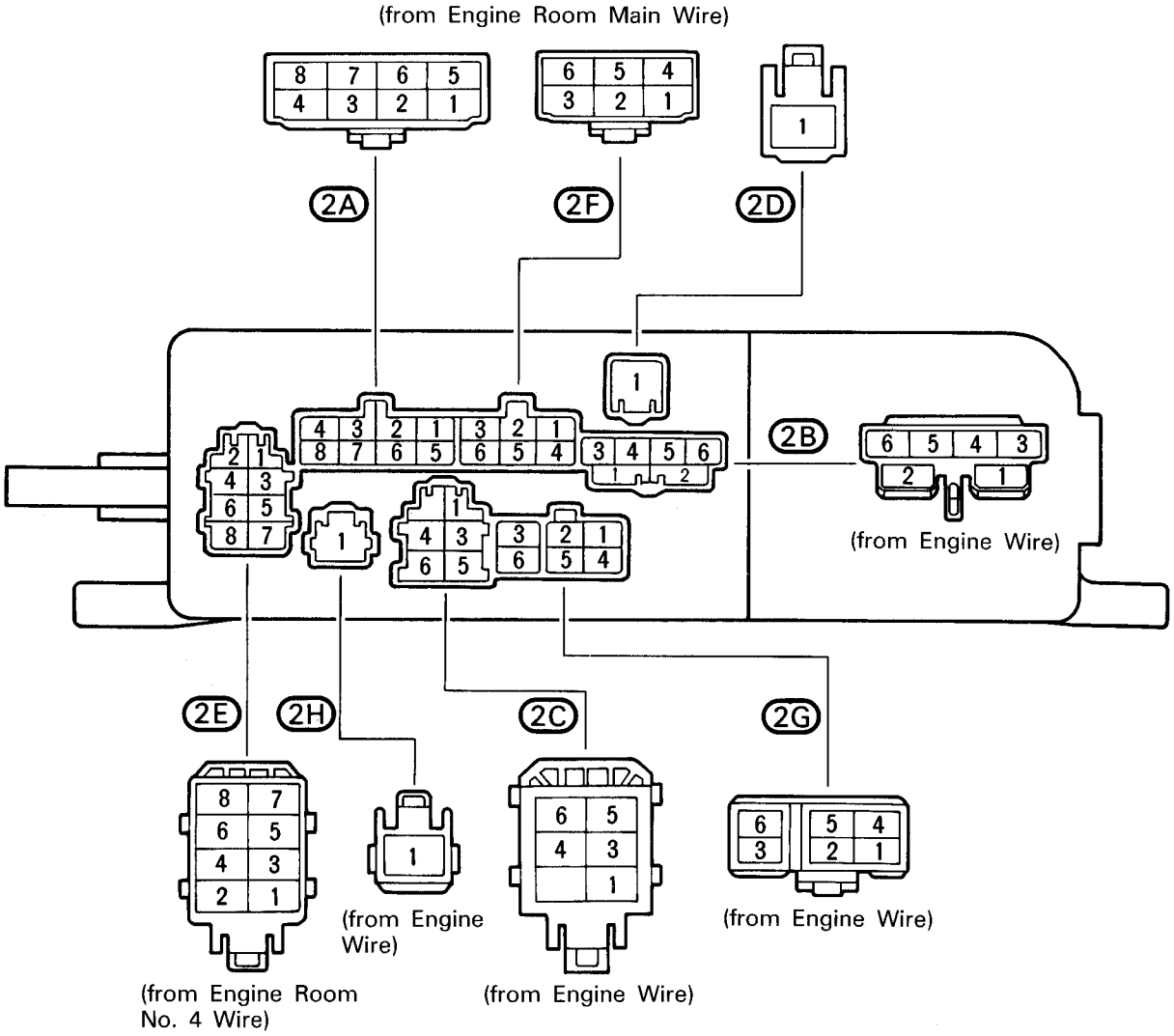

[J/B No. 2 Inner Circuit]

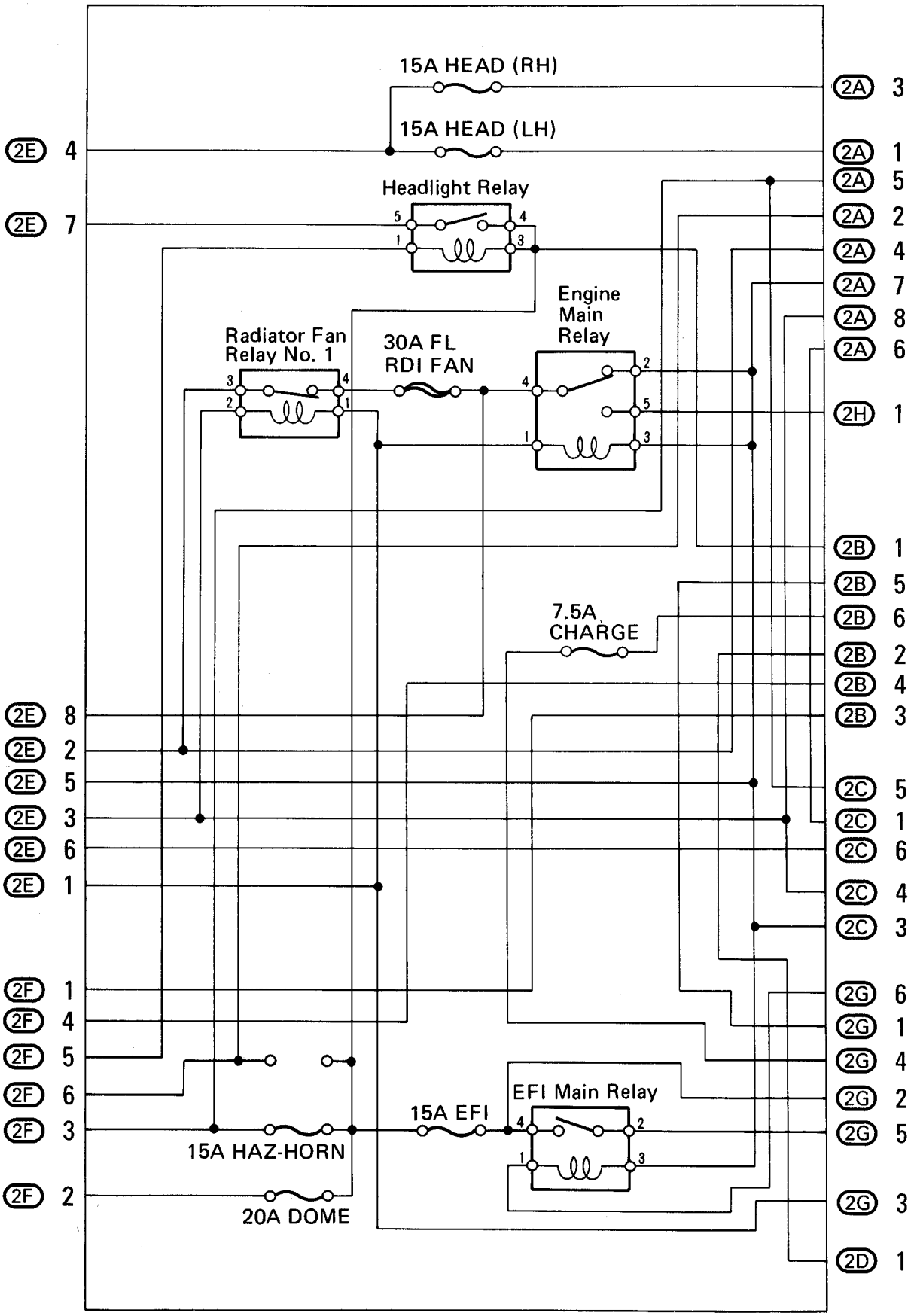

RELAY LOCATIONS

: J/B No. 3	Instrument Panel Left (See Page 17)

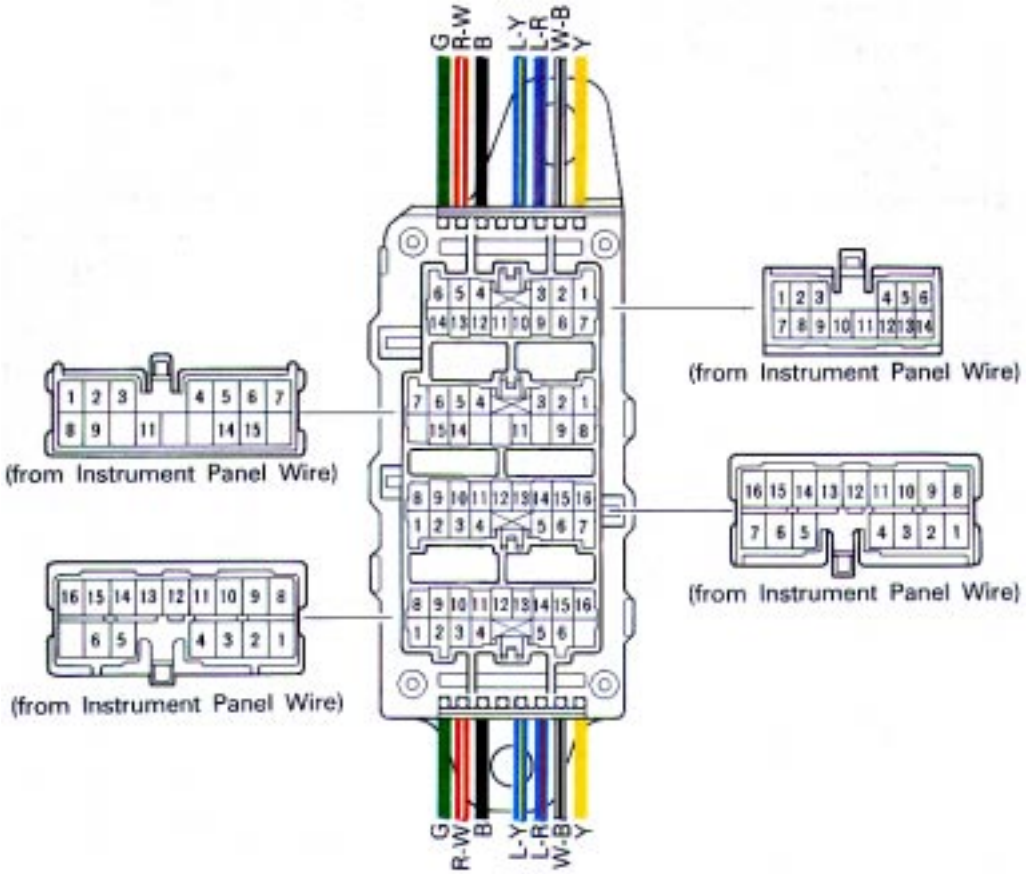

[J/B No. 3 Inner Circuit]

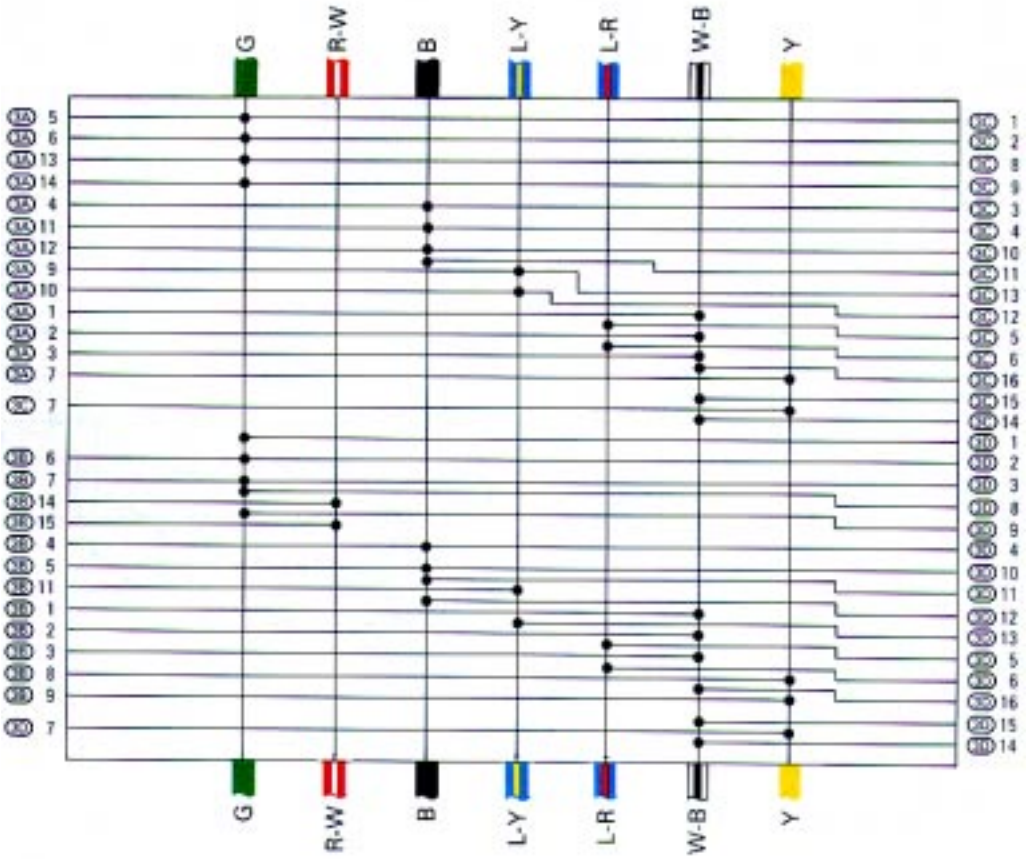

① : R/B No. 1	Left Kick Panel (See Page 17)

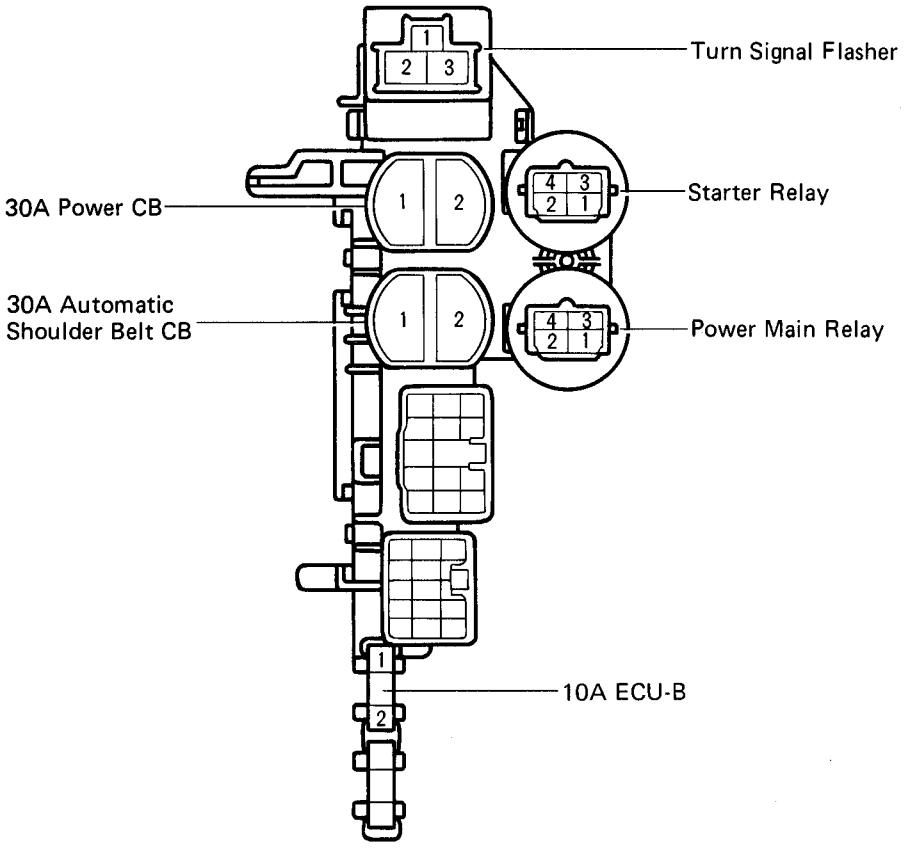

④ : R/B No. 4	Right Kick Panel (See Page 17)

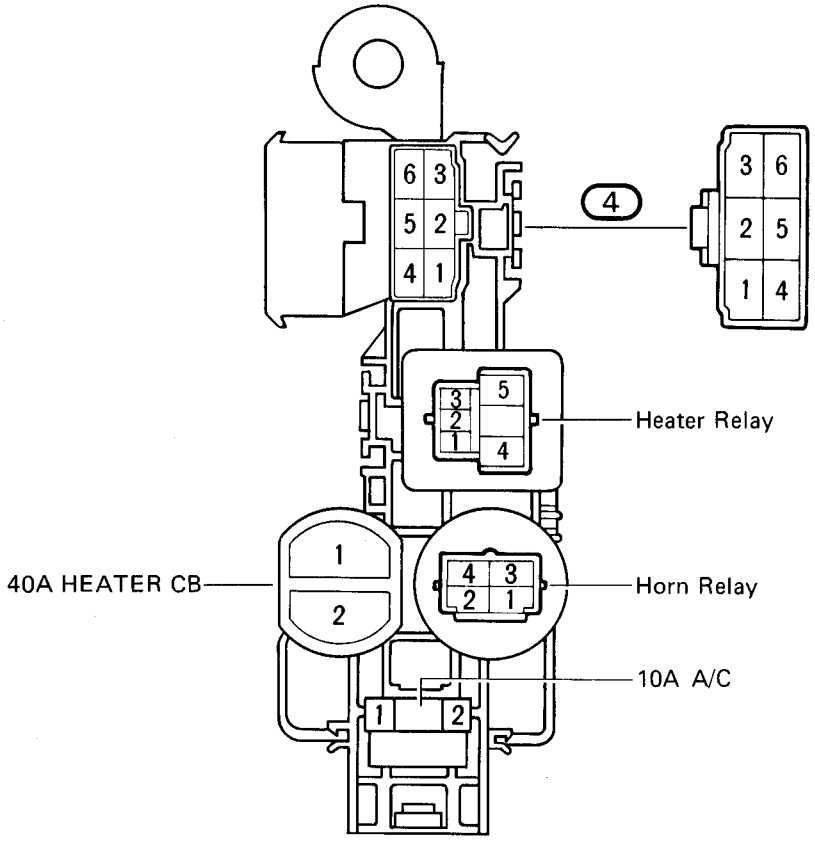

Position of Parts in Engine Compartment

[2VZ–FE]

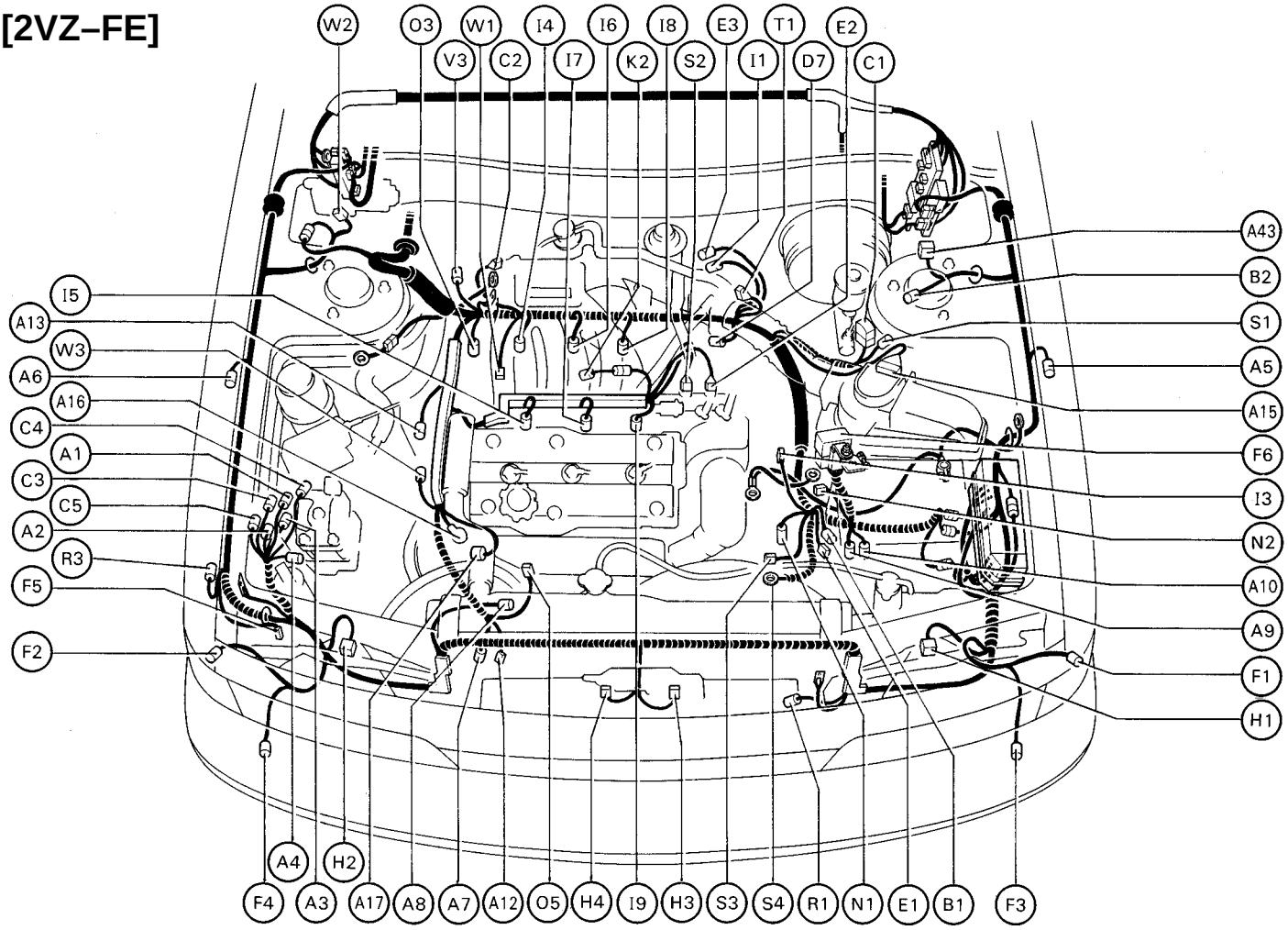

A 1 A.B.S. Actuator
A 2 A.B.S. Actuator
A 3 A.B.S. Actuator
A 4 A.B.S. Check Connector
A 5 A.B.S. Speed Sensor Front LH
A 6 A.B.S. Speed Sensor Front RH
A 7 A/C Compressor Sensor
A 8 A/C Condenser Fan Motor
A 9 A/C Dual Pressure SW
A 10 A/C High Pressure SW (for Radiator Fan) or Short Pin (w/o A/C)
A 11 A/C Idle–Up VSV
A 12 A/C A/C Magnet Clutch
A 13 A/C Water Temp. SW (for Radiator Fan, 3S–FE) or Sensor (for Condenser Fan, 2VZ–FE)
A 14 A/C Water Temp. SW (for A/C Cut, 4WD)
A 15 Air Flow Meter
A 16 Alternator
A 17 Alternator
A 43 A/C Magnet Clutch Relay (for CANADA)
A 44 A/T Fluid Temp. SW

B 1 Back–Up Light SW (M/T)
B 2 Brake Fluid Level Warning SW

C 1 Check Connector
C 2 Cold Start Injector
C 3 Cruise Control Actuator
C 4 Cruise Control Vacuum Pump
C 5 Cruise Control Vacuum SW

D 1 Diff. Lock Indicator SW
D 2 Diff. Lock Solenoid (3S–FE A/T)
D 3 Diff. Lock Solenoid (for Diff. Lock, 4WD)
D 4 Diff. Lock Solenoid (for Diff. Lock, 4WD)
D 5 Diff. Lock Speed Sensor Front (A/T)
D 6 Diff. Lock Speed Sensor Rear (A/T)
D 7 Distributor (2VZ–FE)
D 8 Distributor and Ignition Coil (3S–FE)
D 9 Distributor and Ignition Coil (3S–FE)

E 1 ECT Solenoid or O/D Solenoid
E 2 EFI Water Temp. Sensor
E 3 EGR Gas Temp. Sensor (for California)

F 1 Front Clearance and Side Marker Light LH
F 2 Front Clearance and Side Marker Light RH
F 3 Front Turn Signal Light LH
F 4 Front Turn Signal Light RH
F 5 Front Washer Motor
F 6 Fusible Link Box

H 1 Headlight LH
H 2 Headlight RH
H 3 Horn
H 4 Horn

Position of Parts in Engine Compartment

[3S–FE]

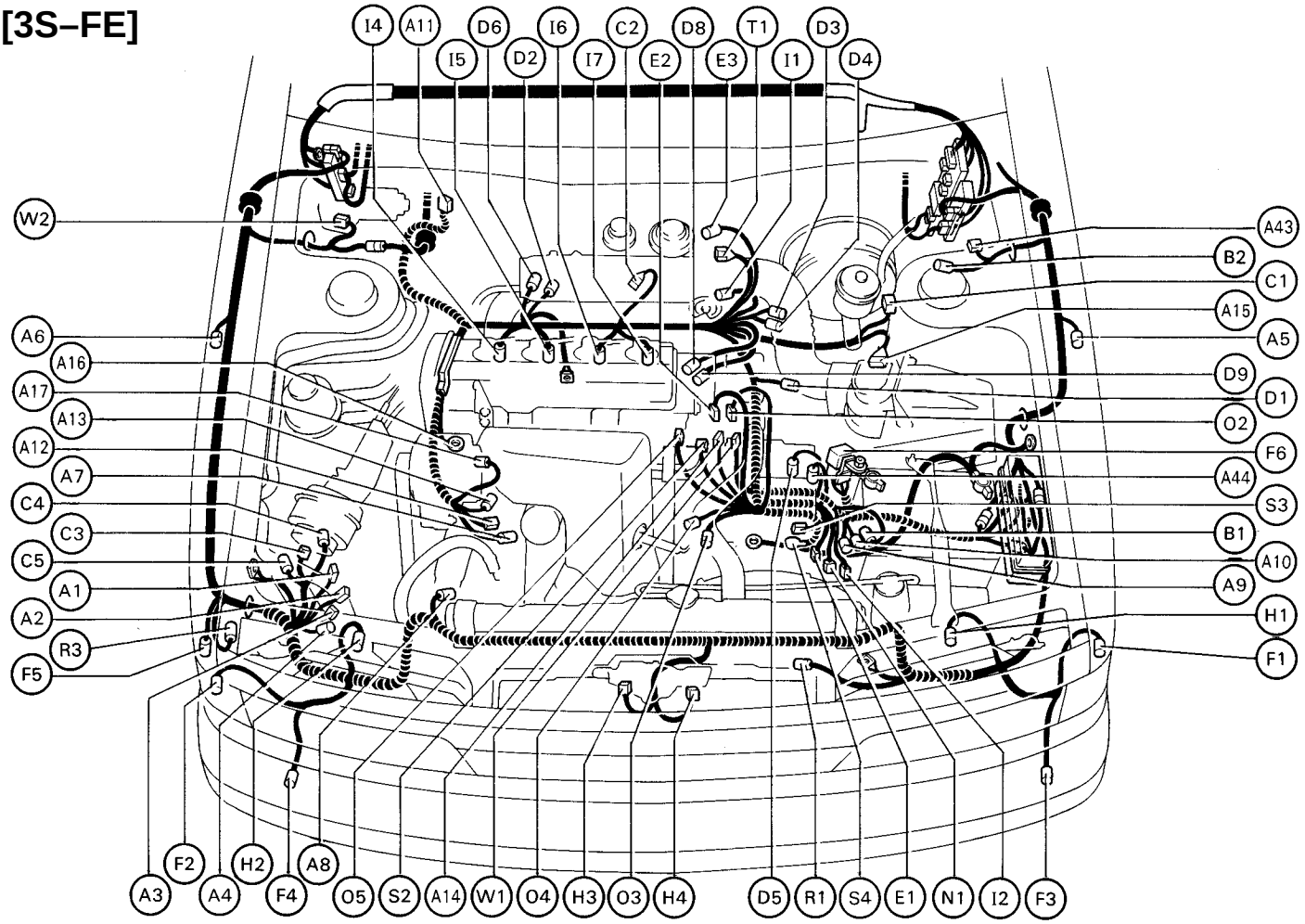

I 1 ISC Valve
I 2 Igniter (3S–FE)
I 3 Igniter and Ignition Coil (2VS–FE)
I 4 Injector No. 1
I 5 Injector No. 2
I 6 Injector No. 3
I 7 Injector No. 4
I 8 Injector No. 5
I 9 Injector No. 6

K 2 Knock Sensor (2VZ–FE)

N 1 Neutral Start SW and Back–Up Light SW (A/T)
N 2 Noise Filter (for Ignition System)

O 2 O/D Water Temp. SW
O 3 Oxygen Sensor Main
O 4 Oxygen Sensor Sub (3S–FE)
O 5 Oil Pressure SW

R 1 Radiator Fan Motor
R 3 Rear Washer Motor

S 1 Short Pin (for Fan Check)
S 2 Start Injector Time SW
S 3 Starter
S 4 Starter

T 1 Throttle Position Sensor

V 3 VSV (for Fuel Pressure Up)

W 1 Water Temp. Sender
W 2 Wiper Motor
W 3 Water Temp. Sensor (for Radiator Fan, 2VZ–FE)

Position of Parts in Body

[SEDAN]

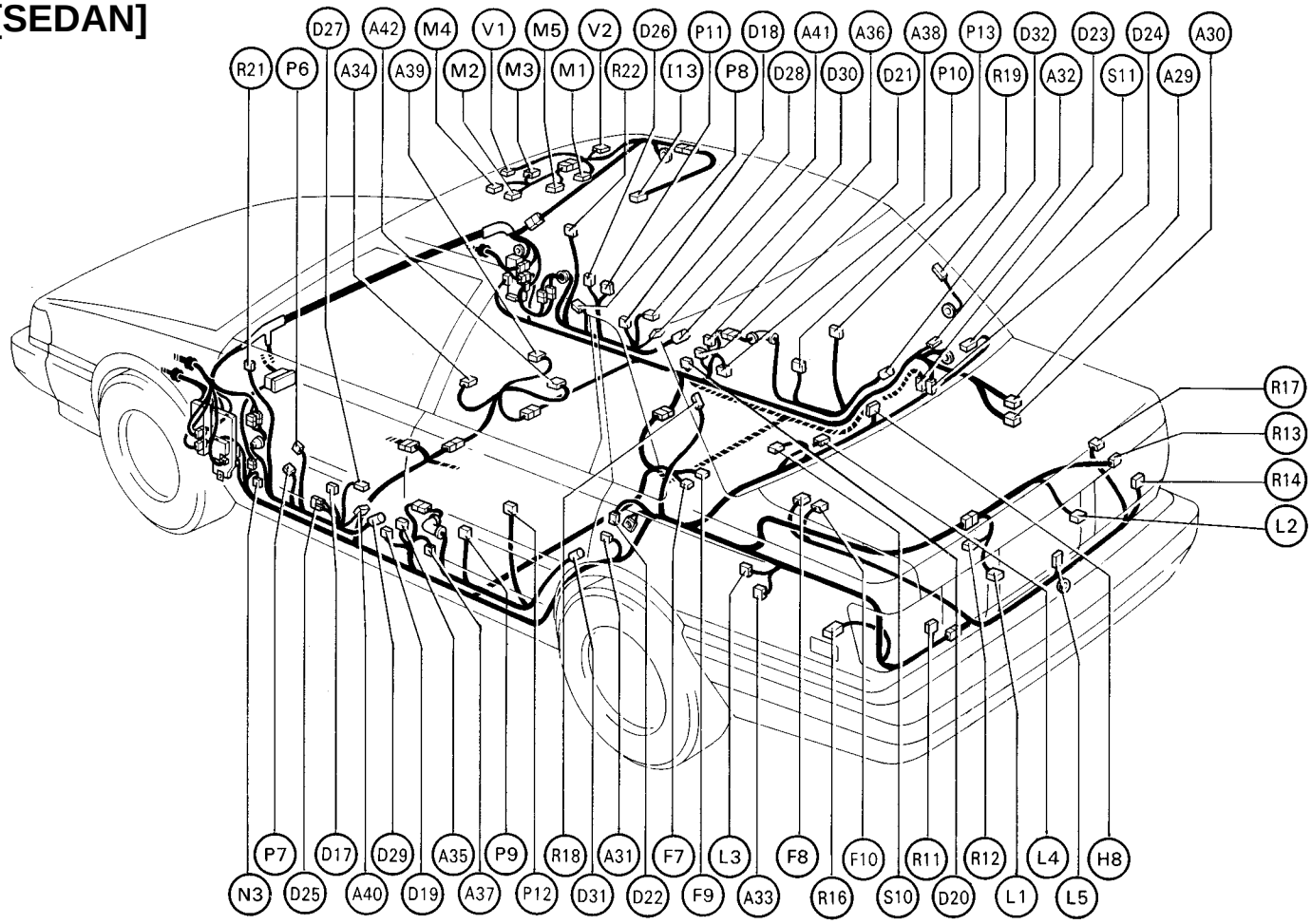

A 29 A.B.S. Computer
A 30 A.B.S. Computer
A 31 A.B.S. Speed Sensor Rear LH
A 32 A.B.S. Speed Sensor Rear RH
A 33 Auto Antenna Motor and Control Relay
A 34 Automatic Shoulder Belt Computer (USA)
A 35 Automatic Shoulder Belt Limit SW LH
A 36 Automatic Shoulder Belt Limit SW RH
A 37 Automatic Shoulder Belt Motor LH
A 38 Automatic Shoulder Belt Motor RH
A 39 Automatic Shoulder Belt Release Lever Warning Light (USA)
A 40 Automatic Shoulder Belt SW LH
A 41 Automatic Shoulder Belt SW RH
A 42 Automatic Shoulder Belt Spool Release SW

B 8 Back Door Courtesy SW (W/G)
B 9 Back Door Lock Solenoid (W/G)

D 17 Door Courtesy Light LH
D 18 Door Courtesy Light RH
D 19 Door Courtesy SW Front LH
D 20 Door Courtesy SW Front RH (CANADA)
D 21 Door Courtesy SW Front RH (USA)
D 22 Door Courtesy SW Rear LH
D 23 Door Courtesy SW Rear RH (CANADA)
D 24 Door Courtesy SW Rear RH (USA)
D 25 Door Key Cylinder Light and Outside handle SW
D 26 Door Lock Control SW RH
D 27 Door Lock Key SW LH
D 28 Door Lock Key SW RH
D 29 Door Lock Solenoid Front LH
D 30 Door Lock Solenoid Front RH
D 31 Door Lock Solenoid Rear LH
D 32 Door Lock Solenoid Rear RH

F 7 Fuel Pump
F 8 Fuel Pump (All–Trac/4WD)
F 9 Fuel Sender
F 10 Fuel Sender (All–Trac/4WD)

H 8 High Mount Stop Light

I 13 Interior Light

Position of Parts in Body

[STATION WAGON]

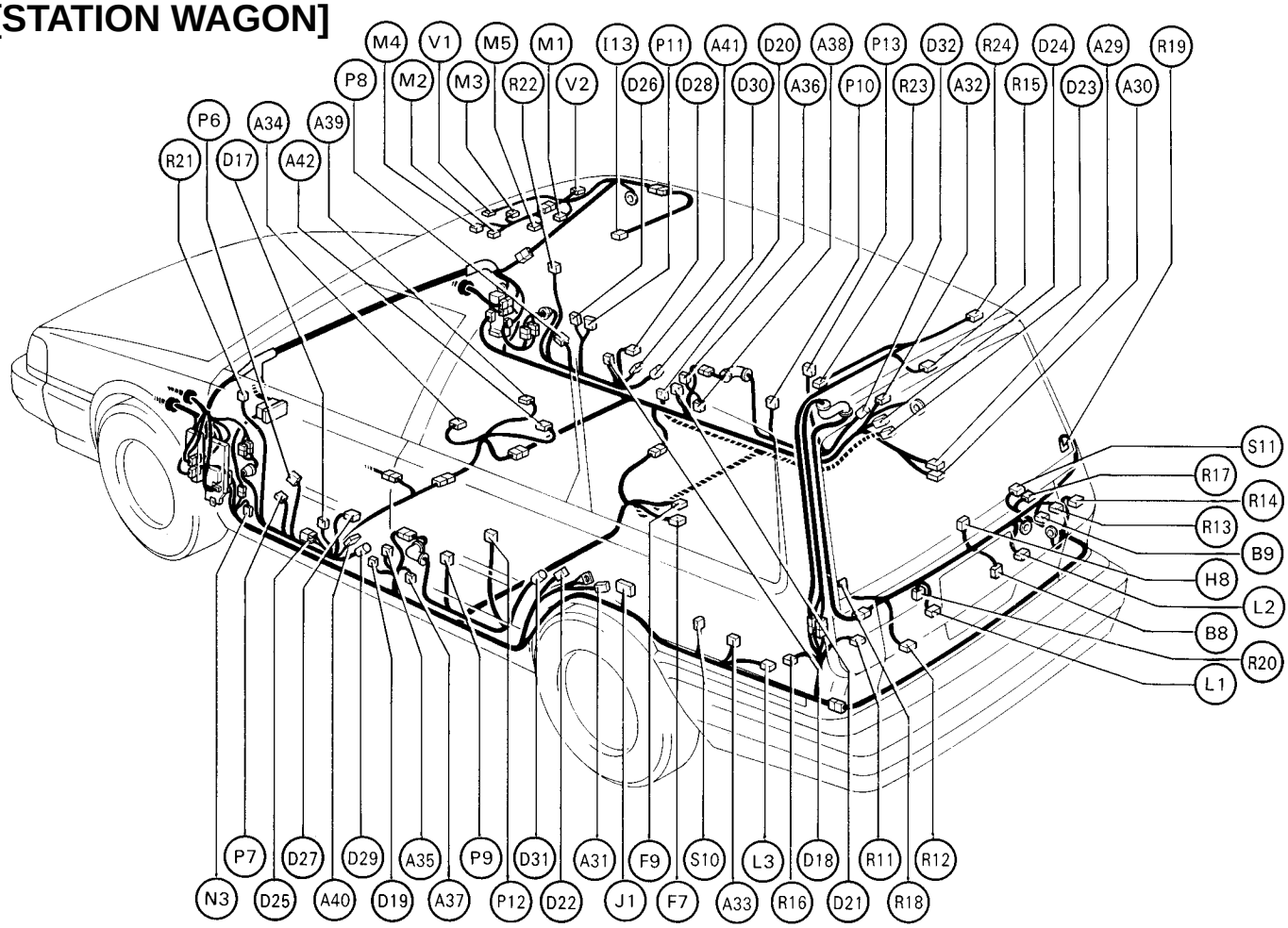

J 1 Junction Connector (W/G)

L 1 Licence Plate Light LH
L 2 Licence Plate Light RH
L 3 Light Failure Sensor
L 4 Luggage Compartment Light (S/D)
L 5 Luggage Compartment Light SW (S/D)

M 1 Map Light (w/o Moon Roof)
M 2 Moon Roof Control Relay
M 3 Moon Roof Limit SW
M 4 Moon Roof Motor
M 5 Moon Roof SW and/or Map Light

N 3 Noise Filter (Defogger)

P 6 Power Window Master SW and Door Lock Control SW LH
P 7 Power Window Motor Front LH
P 8 Power Window Motor Front RH
P 9 Power Window Motor Rear LH
P 10 Power Window Motor Rear RH
P 11 Power Window SW Front RH
P 12 Power Window SW Rear LH
P 13 Power Window SW Rear RH

R 11 Rear Combination Light LH
R 12 Rear Combination Light LH
R 13 Rear Combination Light RH
R 14 Rear Combination Light RH
R 15 Rear Interior Light (W/G)
R 16 Rear Side Marker Light LH
R 17 Rear Side Marker Light RH
R 18 Rear Window Defogger (+)
R 19 Rear Window Defogger (–)
R 20 Rear Wiper Motor
R 21 Remote Control Mirror LH
R 22 Remote Control Mirror RH
R 23 Roof Speaker Rear LH (W/G)
R 24 Roof Speaker Rear RH (W/G)

S 10 Speaker Rear LH
S 11 Speaker Rear RH

V 1 Vanity Light LH
V 2 Vanity Light RH

Position of Parts in Instrument Panel

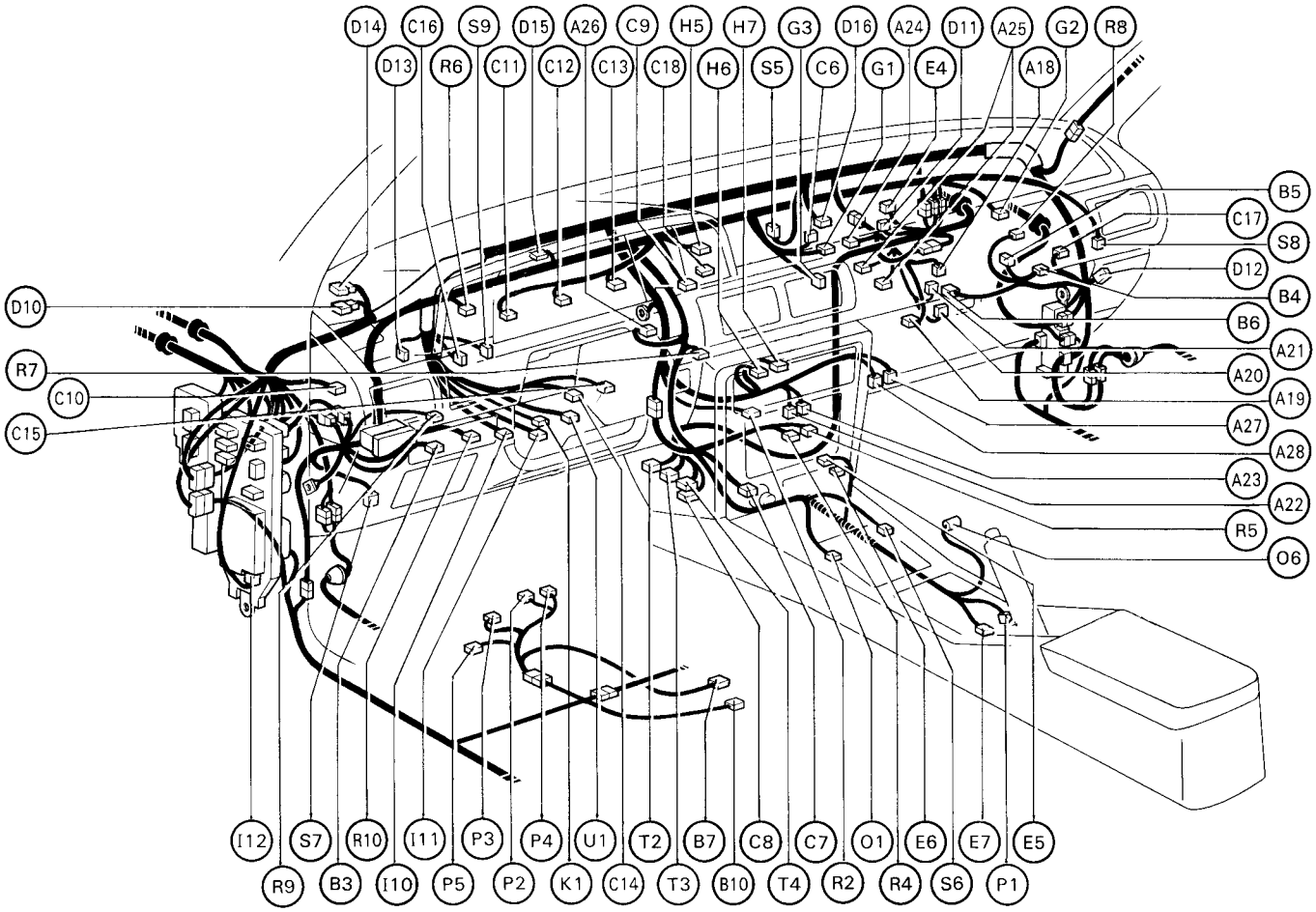

A 18 A/C Acceleration Cut Amplifier (SV) or A/C Condenser Fan Control Amplifier (VSV)
A 19 A/C Amplifier (FWD)
A 20 A/C Amplifier (All–Trac/4WD)
A 21 A/C Cut Relay (All–Trac/4WD) or Compressor Control Amplifier (2VZ–FE)
A 22 A/C System Amplifier (for Heater)
A 23 A/C System Amplifier (for Heater)
A 24 A/C Thermistor (3S–FE)
A 25 A/C Thermistor and Diode (2VZ–FE)
A 26 A/T Indicator (Instrument Panel)
A 27 Air Mix Control Servo Motor
A 28 Air Vent Mode Control Servo Motor

B 3 Back Door Lock Control SW (W/G)
B 4 Blower Control Relay
B 5 Blower Motor
B 6 Blower Resistor
B 7 Buckle SW (w/ Power Seat)
B 10 Buckle SW (w/o Power Seat)

C 6 Center Diff. Lock Indicator Light (All–Trac/4WD)
C 7 Cigarette Lighter
C 8 Circuit Opening Relay
C 9 Clock
C 10 Clutch Start SW (M/T)
C 11 Combination Meter
C 12 Combination Meter
C 13 Combination Meter
C 14 Combination SW
C 15 Combination SW
C 16 Cruise Control Clutch SW
C 17 Cruise Control Computer
C 18 Cruise Control Main SW

D 10 Diode (Electrical Idle–Up System)
D 11 Diode (Over Drive System)
D 12 Diode (for Interior Light System, w/ Door Lock System)
D 13 Diode (for Interior Light System, w/o Door Lock System)
D 14 Diode (for Front Wiper System)
D 15 Diode (for Rear Wiper System)
D 16 Door Lock Control Relay

E 4 ECT ECU (FWD)
E 5 ECT ECU (All–Trac/4WD)
E 6 ECT ECU (All–Trac/4WD)
E 7 ECT Pattern Select SW

G 1 Glove Box Light
G 2 Glove Box Light SW (CANADA)
G 3 Glove Box Light SW (USA)

H 5 Hazard SW
H 6 Heater Control Assembly (Push SW Type) or A/C SW and Blower SW (Lever SW Type)
H 7 Heater Control Assembly (Push SW Type) or A/C SW and Blower SW (Lever SW Type)

I 10 Ignition Key Cylinder Light
I 11 Ignition SW
I 12 Integration Relay

K 1 Key Interlock Solenoid

O 1 O/D Main SW and A/T Indicator Light
O 6 OX Sensor Sub (2VZ–FE)

P 1 Parking Brake SW
P 2 Power Seat Motor (Front Vertical)
P 3 Power Seat Motor (Rear Vertical)
P 4 Power Seat Motor (Slide)
P 5 Power Seat SW

R 2 Running Light Control Relay (for CANADA)
R 4 Radio and Tape Player
R 5 Radio and Tape Player
R 6 Rear Window Defogger SW
R 7 Rear Wiper and Washer SW (W/G) or Diff. Lock Control SW (All–Trac/4WD)
R 8 Recirc/Fresh Control Servo Motor
R 9 Remote Control Mirror SW
R 10 Rheostat

S 5 Seat Belt Warning Relay
S 6 Shift Lock Control Computer
S 7 Speaker Front LH
S 8 Speaker Front RH
S 9 Stop Light SW and Cruise Control Stop SW

T 2 TCCS ECU (Engine ECU)
T 3 TCCS ECU (Engine ECU)
T 4 TCCS ECU (Engine ECU)

U 1 Unlock Warning SW

▭ : Location of Connector Joining Wire Harness and Wire Harness

[2VZ–FE]

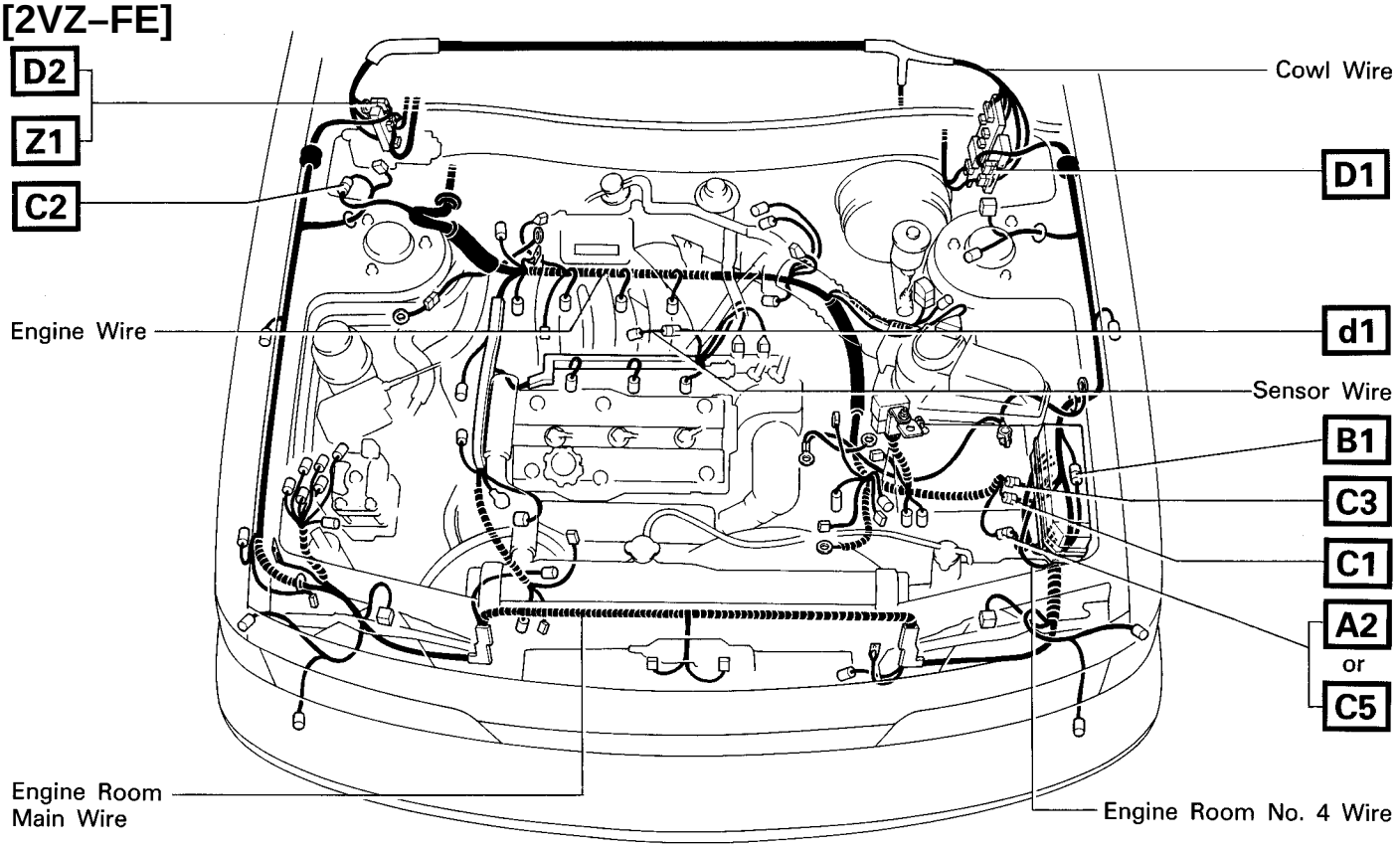

▽ : Location of Ground Points

[2VZ–FE]

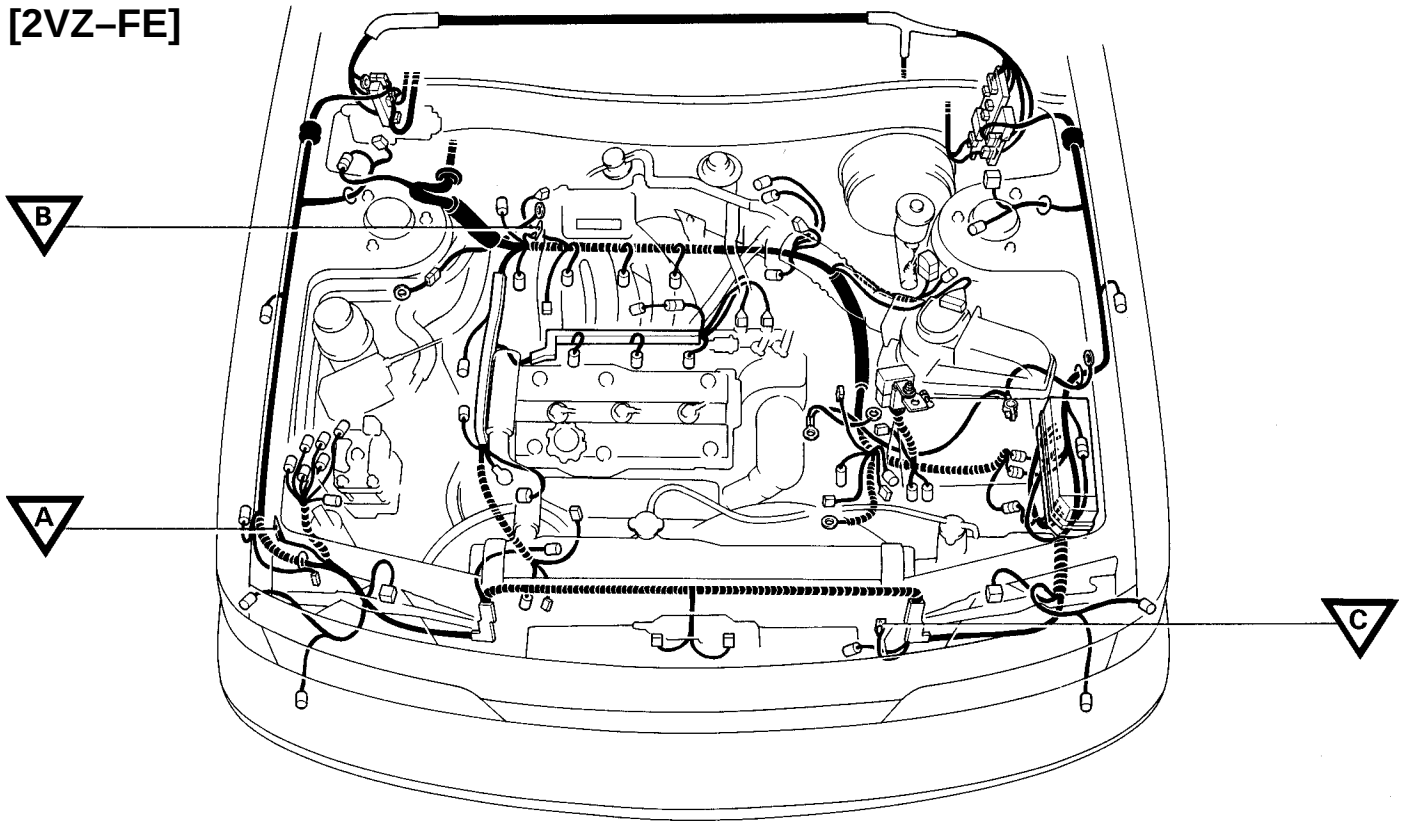

Connector Joining Wire Harness and Wire Harness

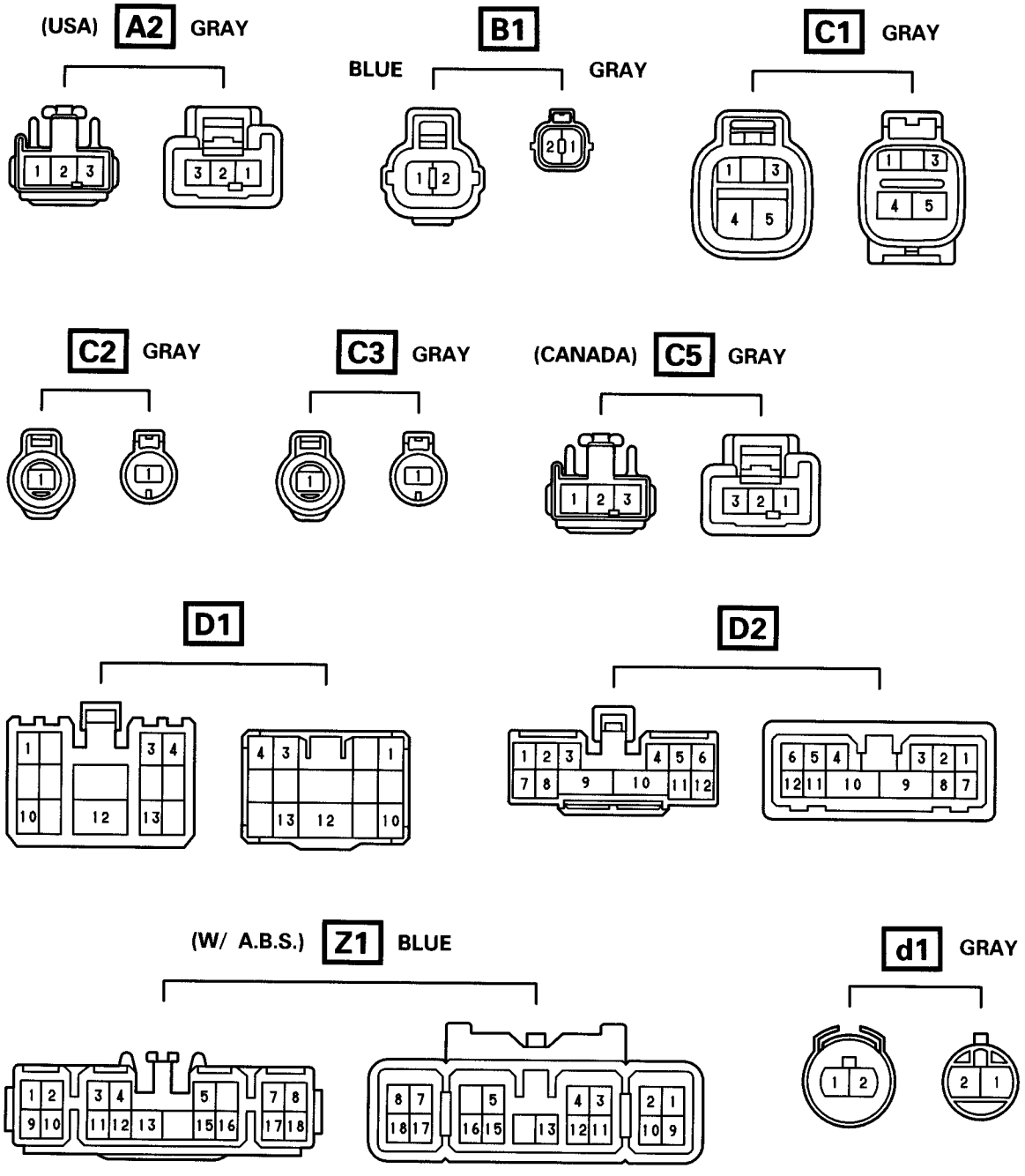

▭ : Location of Connector Joining Wire Harness and Wire Harness

[3S–FE]

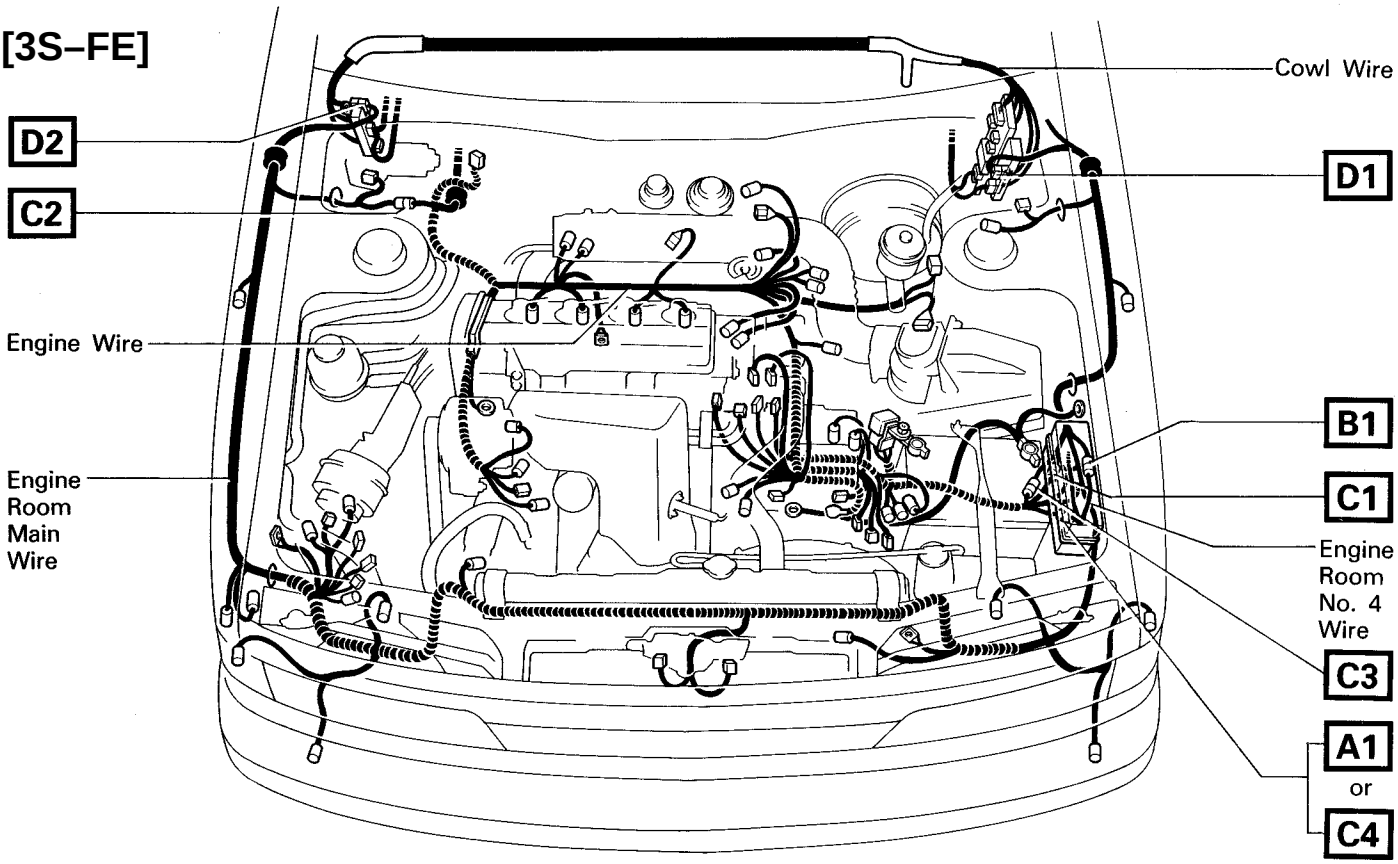

▽ : Location of Ground Points

[3S–FE]

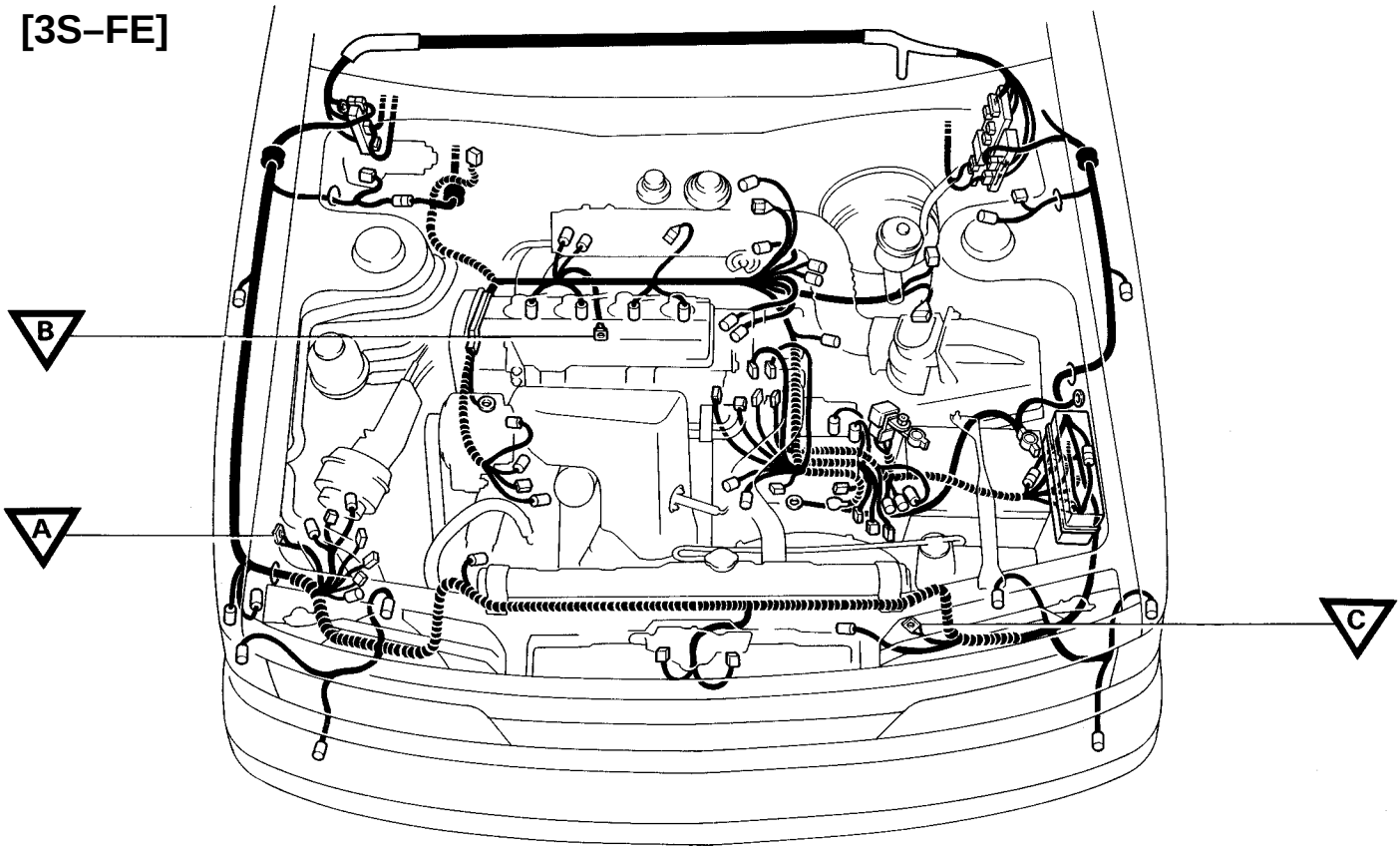

Connector Joining Wire Harness and Wire Harness

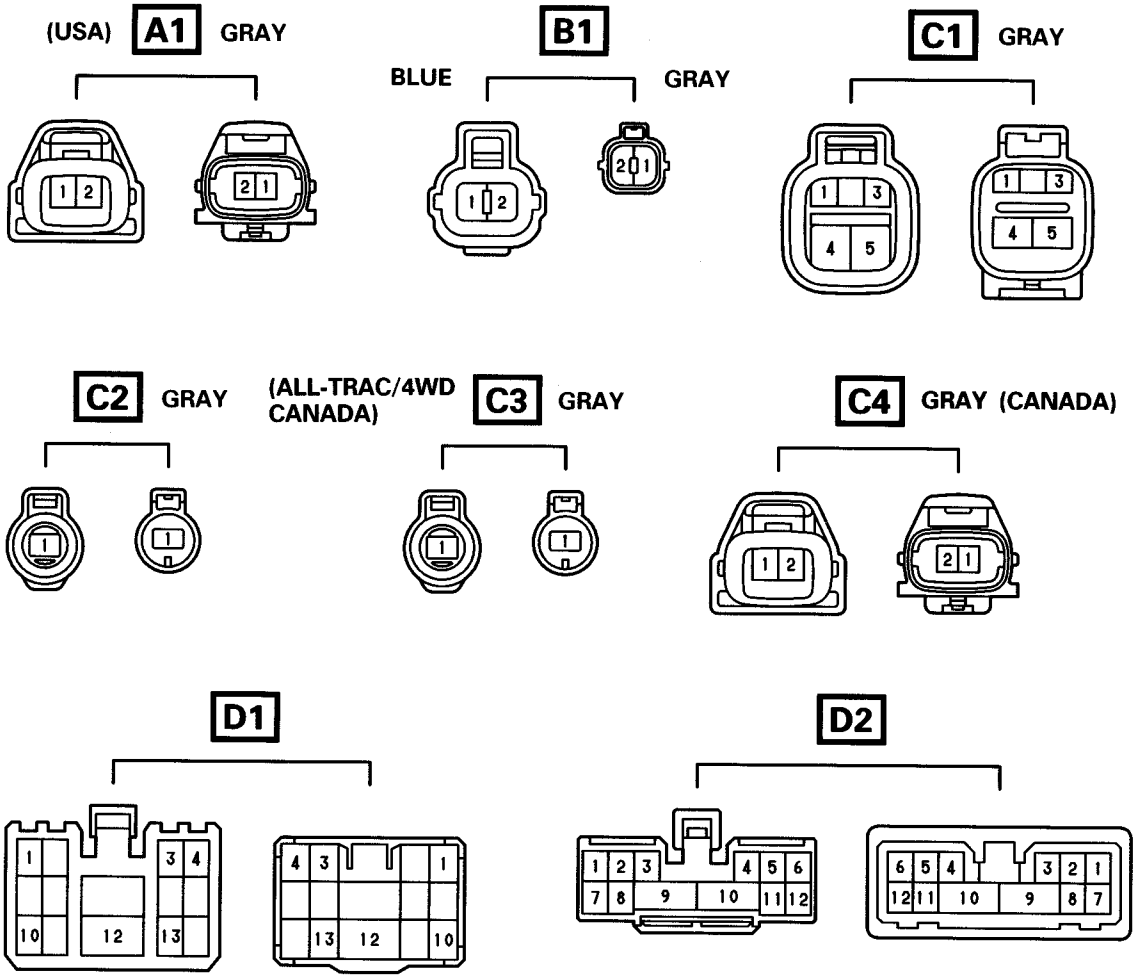

▭ : Location of Connector Joining Wire Harness and Wire Harness

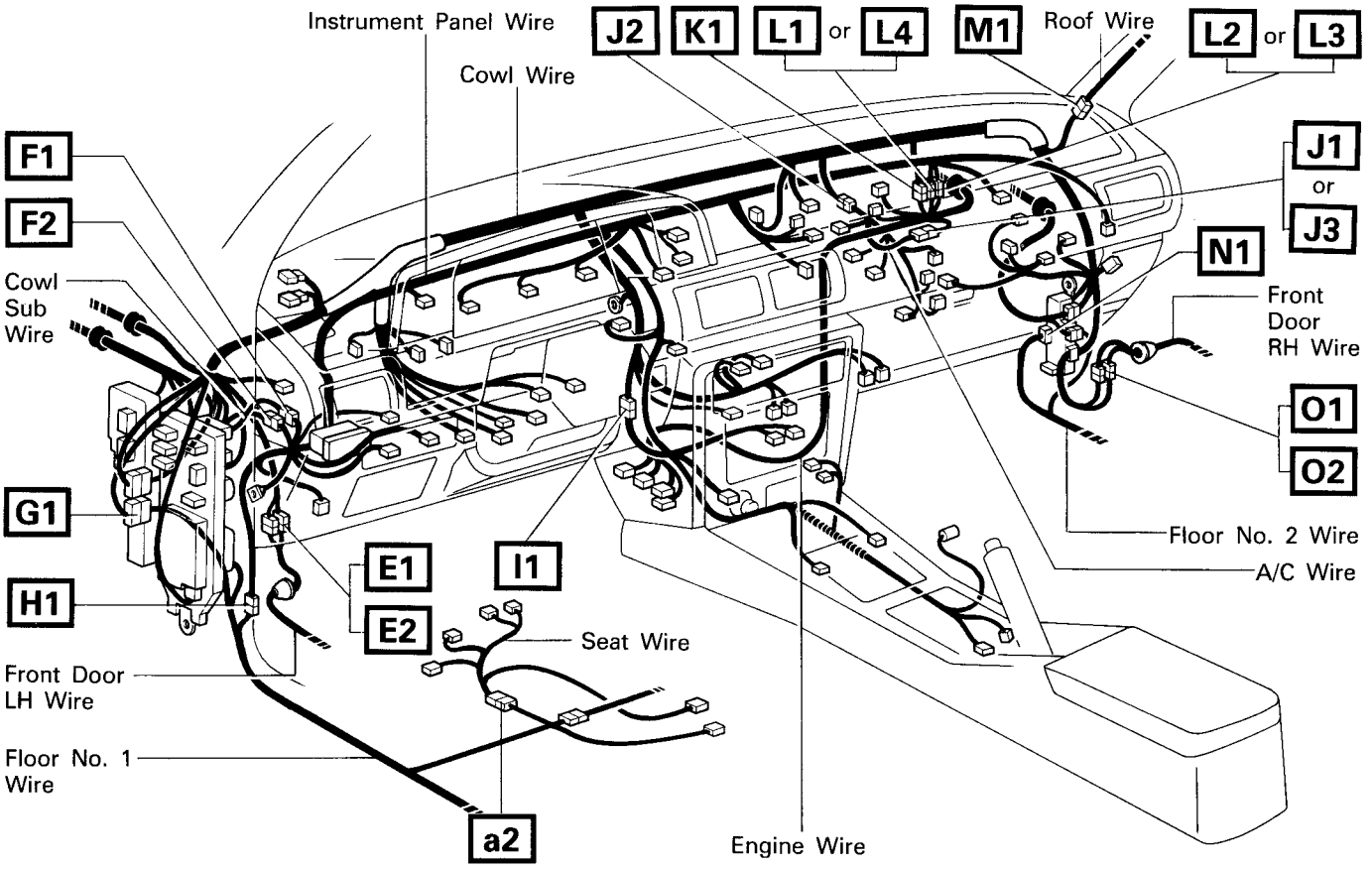

▽ : Location of Ground Points

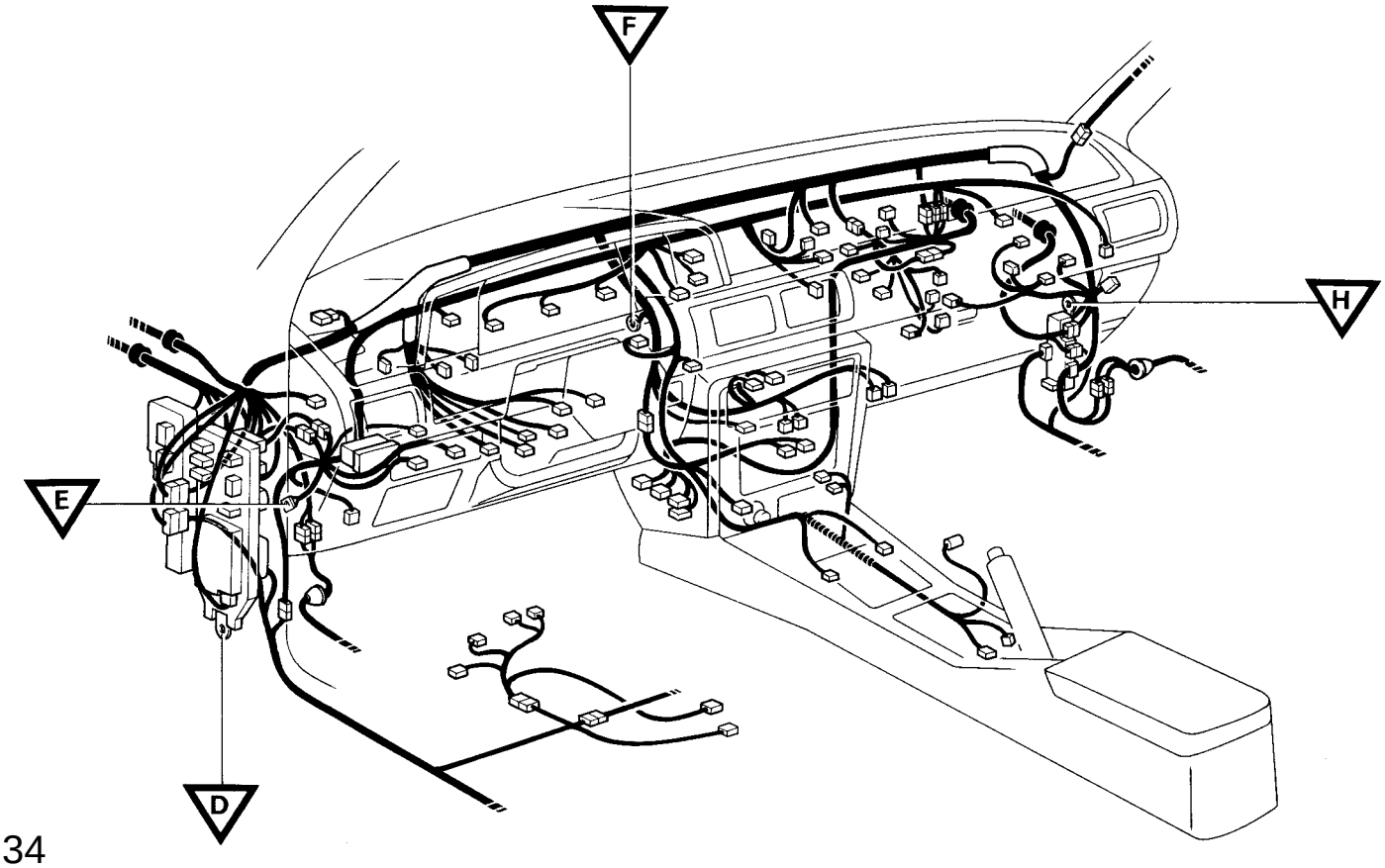

Connector Joining Wire Harness and Wire Harness

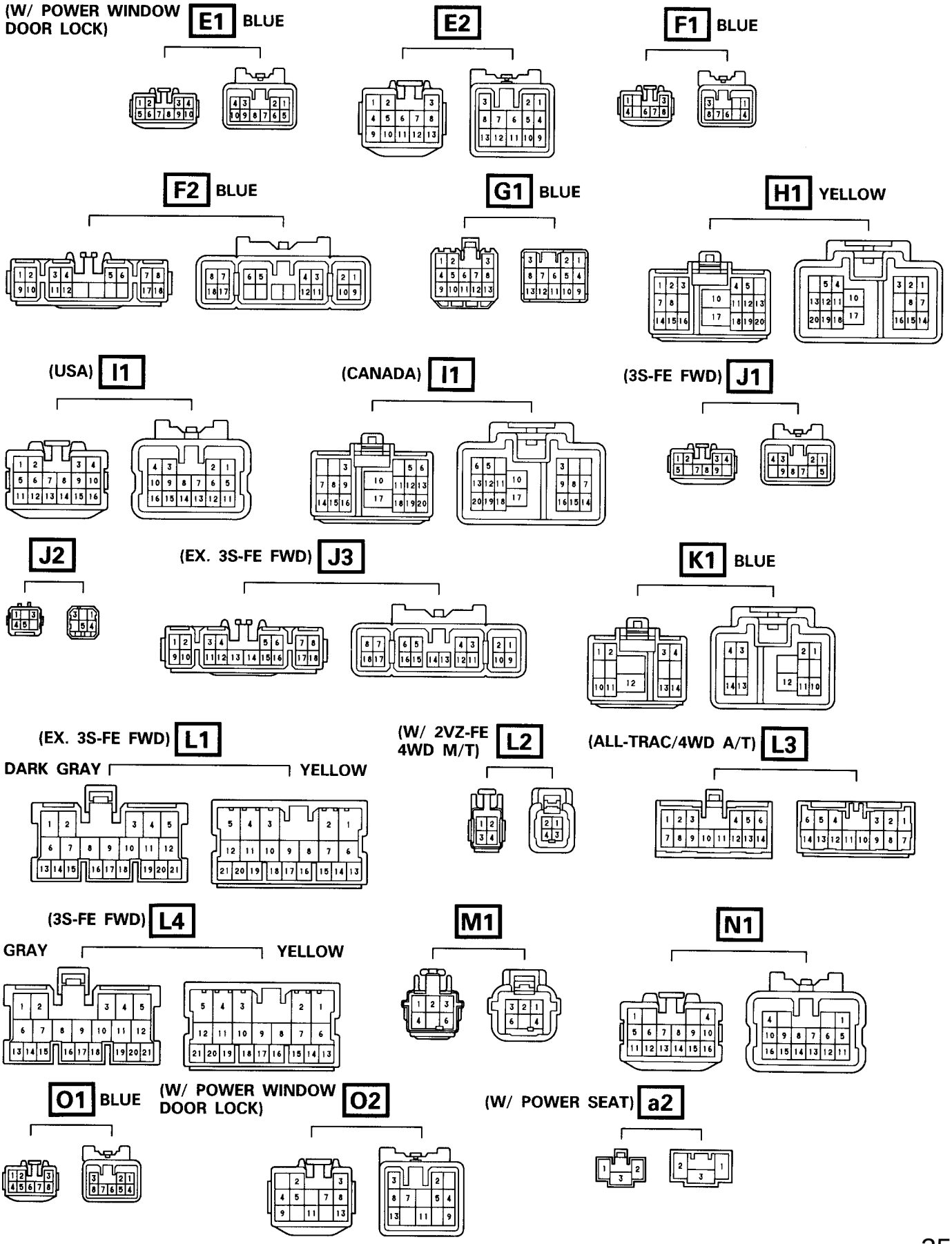

▭ : Location of Connector Joining Wire Harness and Wire Harness

[SEDAN]

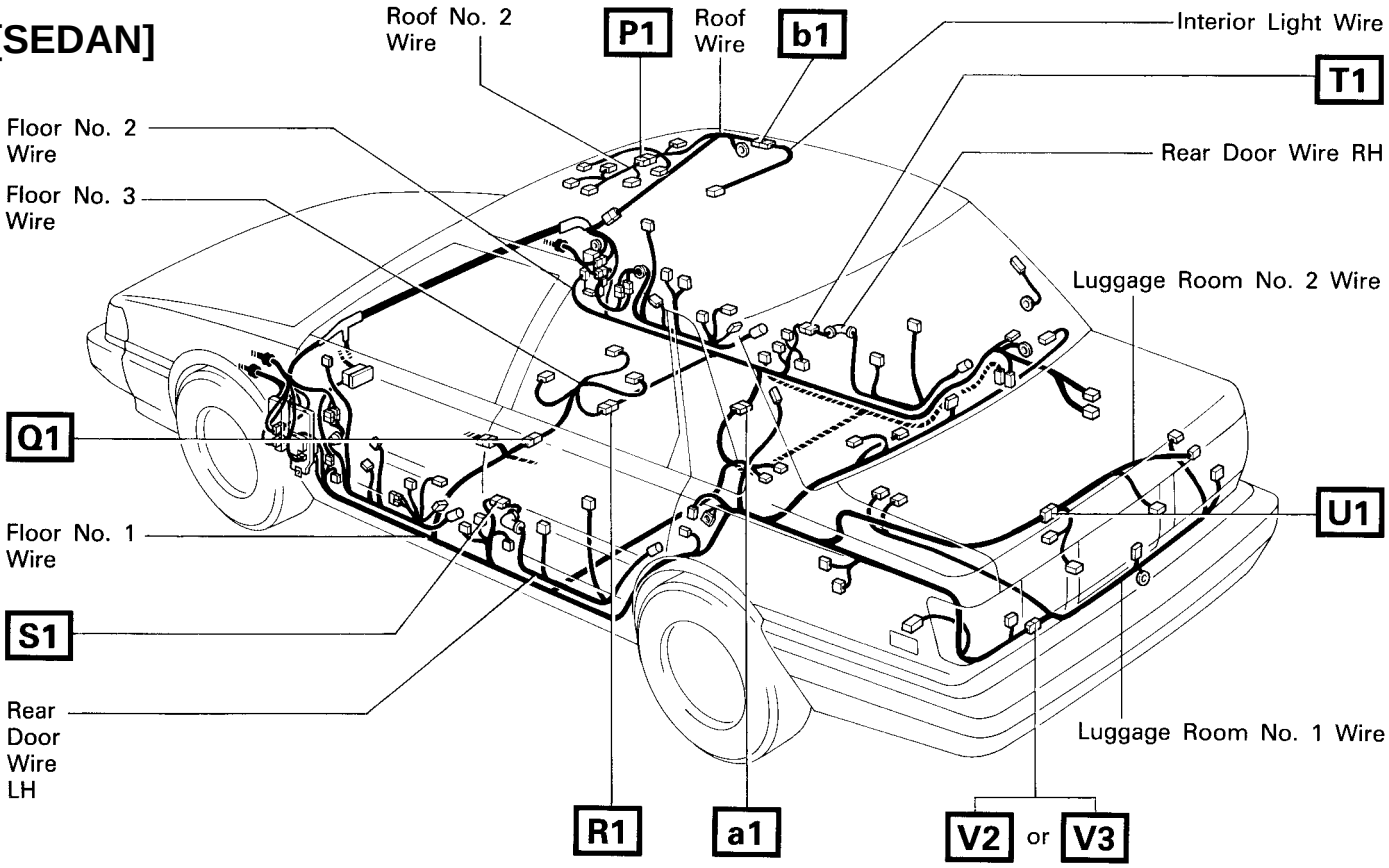

▽ : Location of Ground Points

[SEDAN]

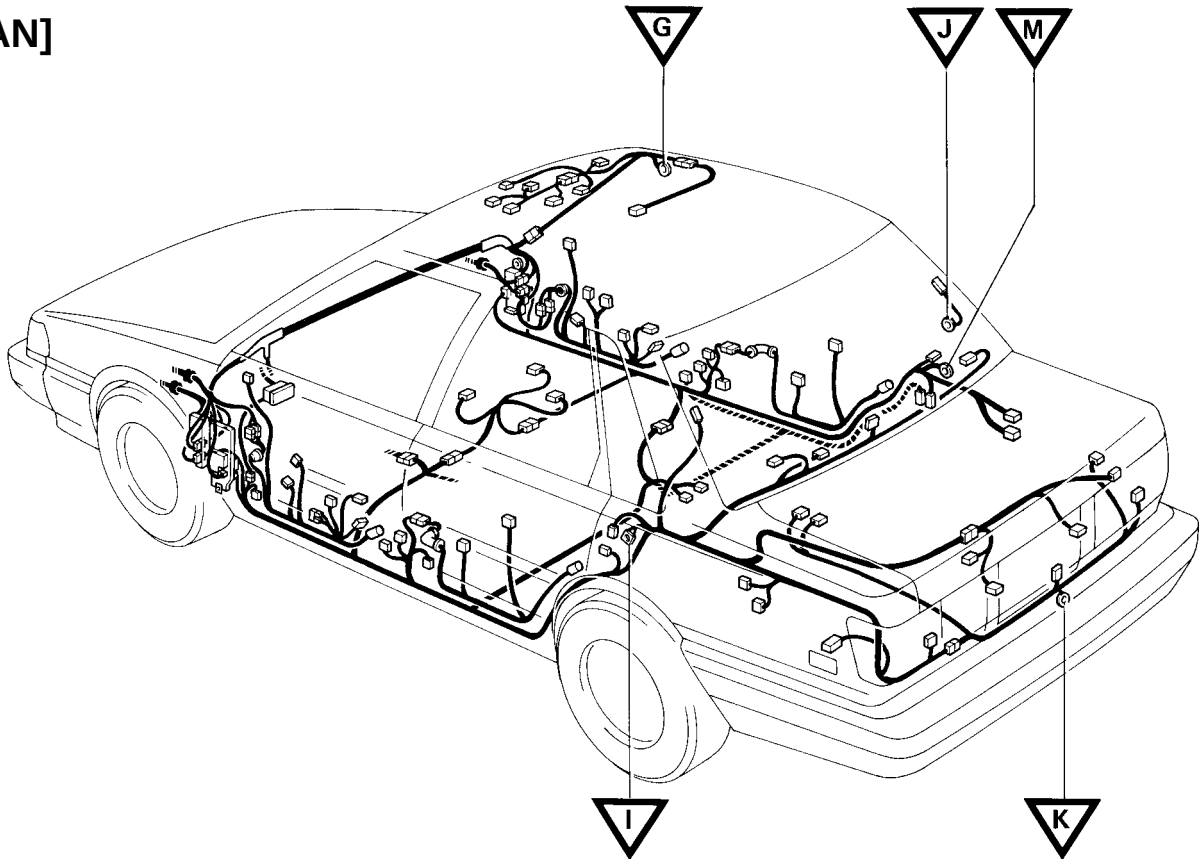

Connector Joining Wire Harness and Wire Harness

P1



(USA) Q1

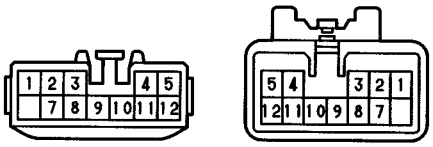

(USA) R1

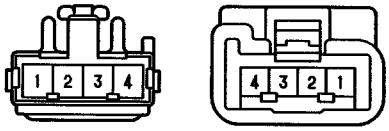

(W/ DOOR LOCK) S1

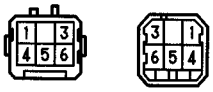

(W/ DOOR LOCK) T1

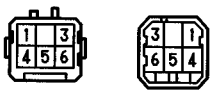

U1

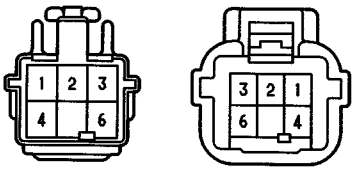

V2

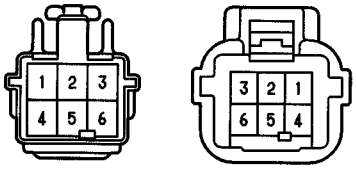

V3

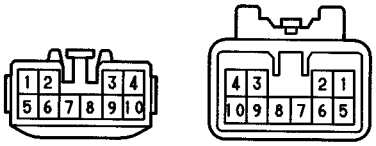

a1



(W/ MOON ROOF) b1



▭ : Location of Connector Joining Wire Harness and Wire Harness

[STATION WAGON]

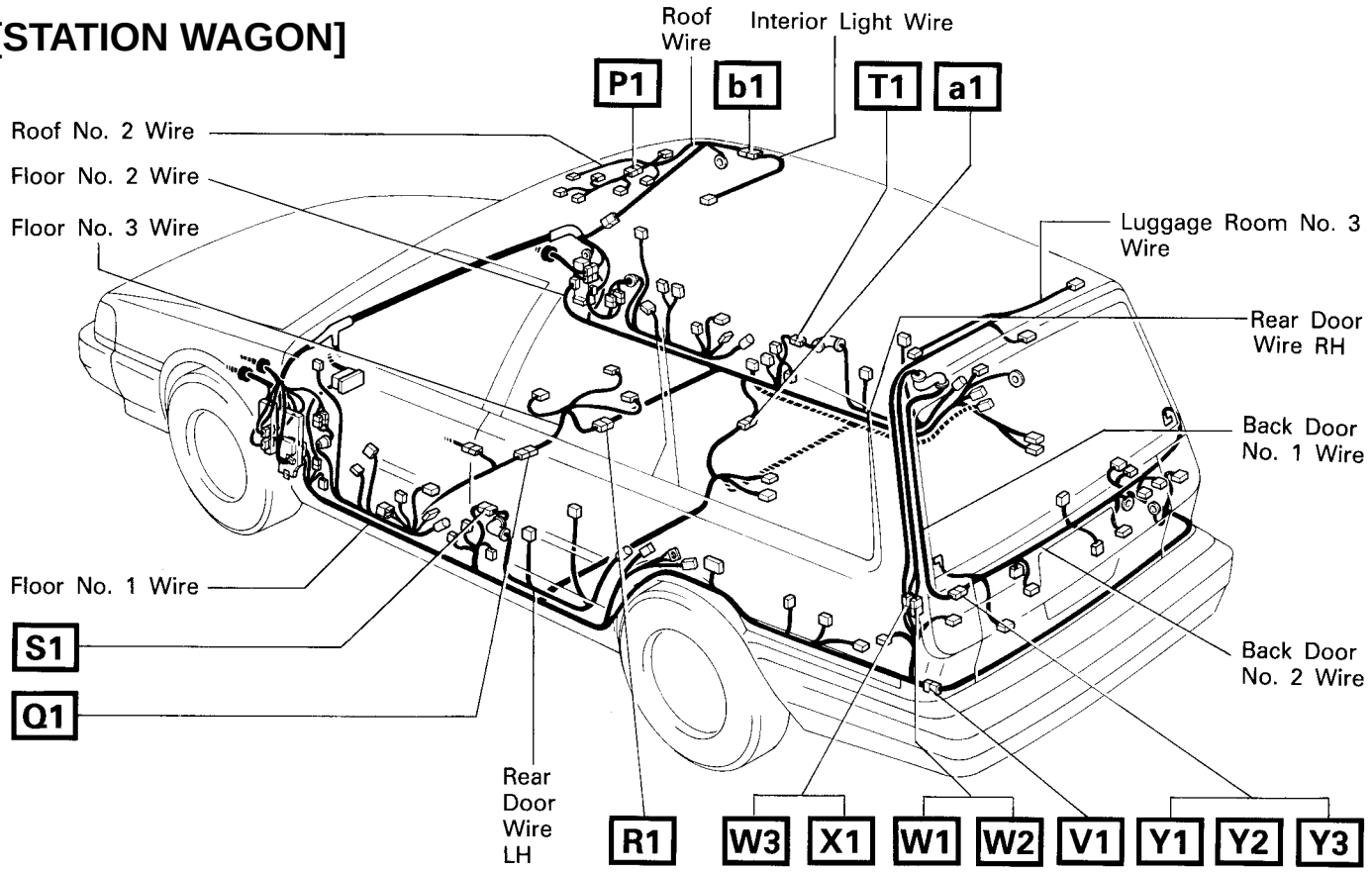

▽ : Location of Ground Points

[STATION WAGON]

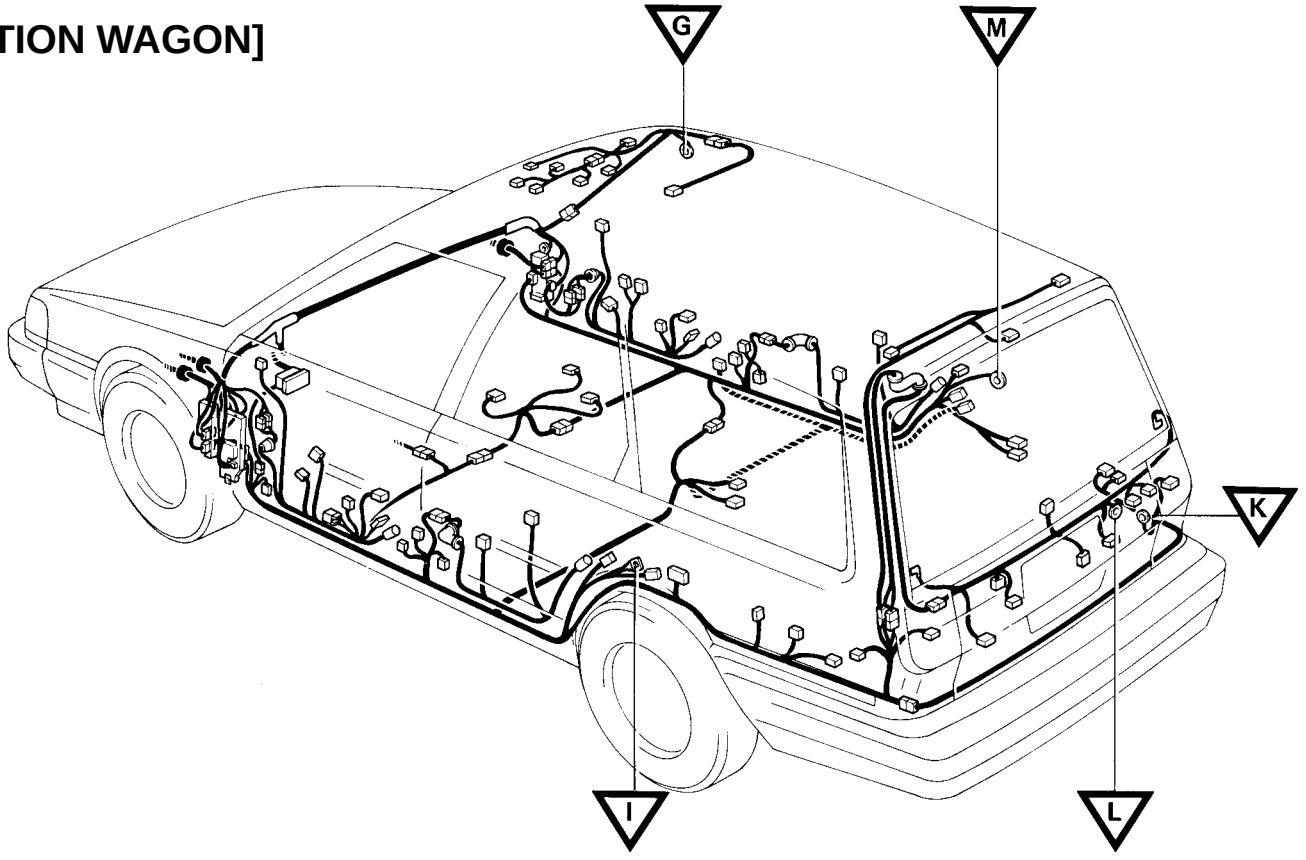

Connector Joining Wire Harness and Wire Harness

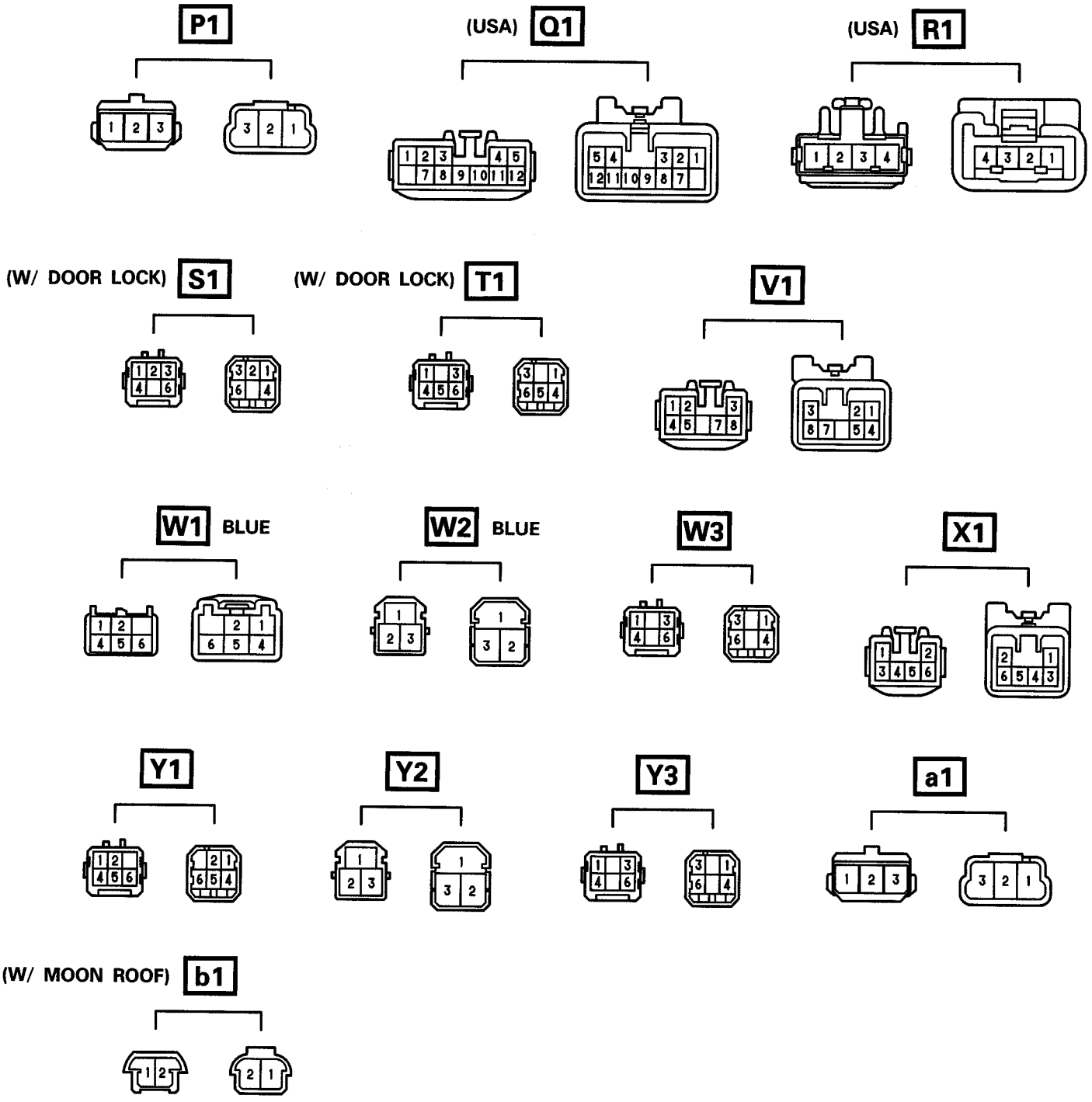

J/B No. 1 (Left Kick Panel)

Power		Load	Page No.
7.5A	IGN	Engine Main Relay	44
		Charge Warning Light	50
		EFI Main Relay (3S–FE), Engine ECU (2VZ–FE)	52, 124
		Radiator Fan Relay No. 1, A/C Fan Relay No. 2	158
20A	WIPER	Washer Motor, Wiper Motor, Wiper Relay	98
		Rear Washer Motor, Rear Wiper Relay, Rear Wiper Motor	100
20A	STOP	Engine ECU	52, 124
		Light Failure Sensor, Stop Lights, Hi Mount Stop Light	94
		Cruise Control Computer	120
		ECT ECU (3S–FE)	129
		Shift Lock Control Computer	140
		A.B.S. Computer	142
7.5A	TURN	Turn Signal Flasher	92
7.5A	GAUGE	Check Engine Warning Light	52
		Integration Relay	68
		Light Failure Sensor, Rear Lights Warning Light	88, 94
		Back–Up Lights	96
		Power Main Relay	102, 148
		Automatic Shoulder Belt Computer, Automatic Shoulder Belt Release Lever Warning Light, Seat Belt Warning Light	114
		Seat Belt Warning Light, Seat Belt Warning Relay	118
		A/T Indicator, O/D Off Indicator Light, ECT ECU (3S–FE), Engine ECU (2VZ–FE)	124
		O/D Solenoid, O/D Off Indicator Light	134
		Diff. Lock Solenoid, Center Diff. Lock Indicator, ECT ECU (A/T)	136
		A.B.S. Warning Light	142
		Rear Window Defogger SW, Defogger Relay	146
		Antenna Motor and Control Relay	150
		Combination Meter	154
		Heater Relay, Blower Control Relay, A/C System Amplifier, Recirc/Fresh Control Servo Motor, Heater Control Assembly	158
15A	TAIL	Engine ECU	67
		Glove Box Light, Combination Meter, Rheostat, ECT Pattern Select SW Light, Rear Wiper SW Light, Cruise Control Main SW Light, Hazard SW Light, O/D Main SW Light, Rear Window Defogger SW Light, Cigarette Lighter Light, A/T Indicator Light, Radio Light, Diff. Lock Control SW Light, Center Diff. Lock Indicator Light, A/C SW Light, Heater Control SW Light	84
		Front Clearance and Side Marker Lights, Licence Plate Lights, Rear Side Marker Lights, Light Failure Sensor, Taillights	88
		Clock	139
15A	ECU–IG	Cruise Control Main SW, Cruise Control Computer	120
		ECT ECU (3S–FE)	129
		Shift Lock Control Computer	140
		A.B.S. Computer	142
7.5A	RADIO	Mirror Motor	112
		Clock	139
		Shift Lock Control Computer	140
		Antenna Motor and Control Relay	150
		Radio and Tape Player	152
15A	CIG	Clock, Cigarette Lighter	139
		Antenna Motor and Control Relay	150
30A	DEFOG CB	Rear Window Defogger	146
10A	MIR–HTR	Engine ECU	67
10A	ENGINE	IC Regulator	50

J/B No. 2 (Engine Compartment)

Power		Load	Page No.
20A	DOME	Integration Relay	68, 76
		Map Light, Door Key Cylinder Light, Door Courtesy Light, Rear Interior Light, Ignition Key Cylinder Light, Interior Light, Vanity Light, Door Warning Light, Luggage Compartment Light	76
		ECT ECU (3S–FE)	129
		Clock	139
		Antenna Motor	150
		Radio and Tape Player	152
7.5A	CHARGE	IC Regulator	50
15A	HEAD LH	Headlight LH (USA)	70
15A	HEAD RH	Headlight RH (USA)	70
15A	HEAD–LO (LH)	Headlight LH (CANADA)	72
15A	HEAD–LO (RH)	Headlight RH (CANADA)	72
15A	HAZ–HORN	Turn Signal Flasher	92
		Horns, Horn Relay	111
15A	EFI	Fuel Pump, ISC Valve, Engine ECU, Circuit Opening Relay, Check Connector, OX Sensor (Main) (2VZ–FE)	52
		Engine ECU	67
		Engine ECU (2VZ–FE)	124
30A	FL RDI FAN	Radiator Fan Motor	158

R/B No. 1 (Near the J/B No. 1)

30A	POWER CB	Power Window Master SW, Power Window Motor	102
		Power Seat Motor	105
		Door Lock Control Relay, Door Lock Solenoid	106
		Back Door Lock Solenoid	110
		Moon Roof Control Relay	148
30A	AUTOMATIC SHOULDER BELT CB	Automatic Shoulder Belt Computer, Automatic Shoulder Belt Motor	114
10A	ECU–B	Seat Belt Warning Relay	118
		A.B.S. Computer	142
		Noise Filter (for Rear Window Defogger)	146

R/B No. 2 (Engine Compartment)

15A	HEAD–HI (RH)	Headlight LH (CANADA)	72
15A	HEAD–HI (RH)	Headlight RH (CANADA)	72
30A	FL CDS FAN	Condenser Fan Motor, A/C Condenser Fan Control Amplifier (2VZ–FE)	158

R/B No. 4 (Right Kick Panel)

10A	A/C	Heater Control Assembly, A/C SW, A/C Amplifier, Magnet Clutch Relay, A/C Magnet Clutch, A/C Idle–Up VSV (3S–FE), A/C Acceleration Cut Amplifier (3S–FE), A/C Fan Relay No. 3 (3S–FE), A/C Cut Relay (ALL–TRAC/4WD), Engine ECU (3S–FE), A/C Condenser Fan Control Amplifier (2VZ–FE), Compressor Control Amplifier (2VZ–FE)	158
40A	HEATER CB	Blower Motor	158

Fusible Link Box (Near the Battery)

30A	FL AM2	IGN Fuse	44
		Noise Filter (2VZ–FE)	46
		Igniter, Ignition Coil and Distributor (3S–FE)	46, 59
		Injector	52
40A	FL MAIN	Headlight Relay	44, 68, 70
80A	ALT	Taillight Relay	44, 68, 72, 84, 88
		FL 0.5G	46
		Alternator	50

Fusible Links (Near the Battery)

FL 0.5G		Automatic Shoulder Belt CB, Power CB	44
		Starter, Starter Relay, Start Injector Time SW, Cold Start Injector	46
		IC Regulator	50
FL 1.0Y		A.B.S. Actuator	142

POWER SOURCE

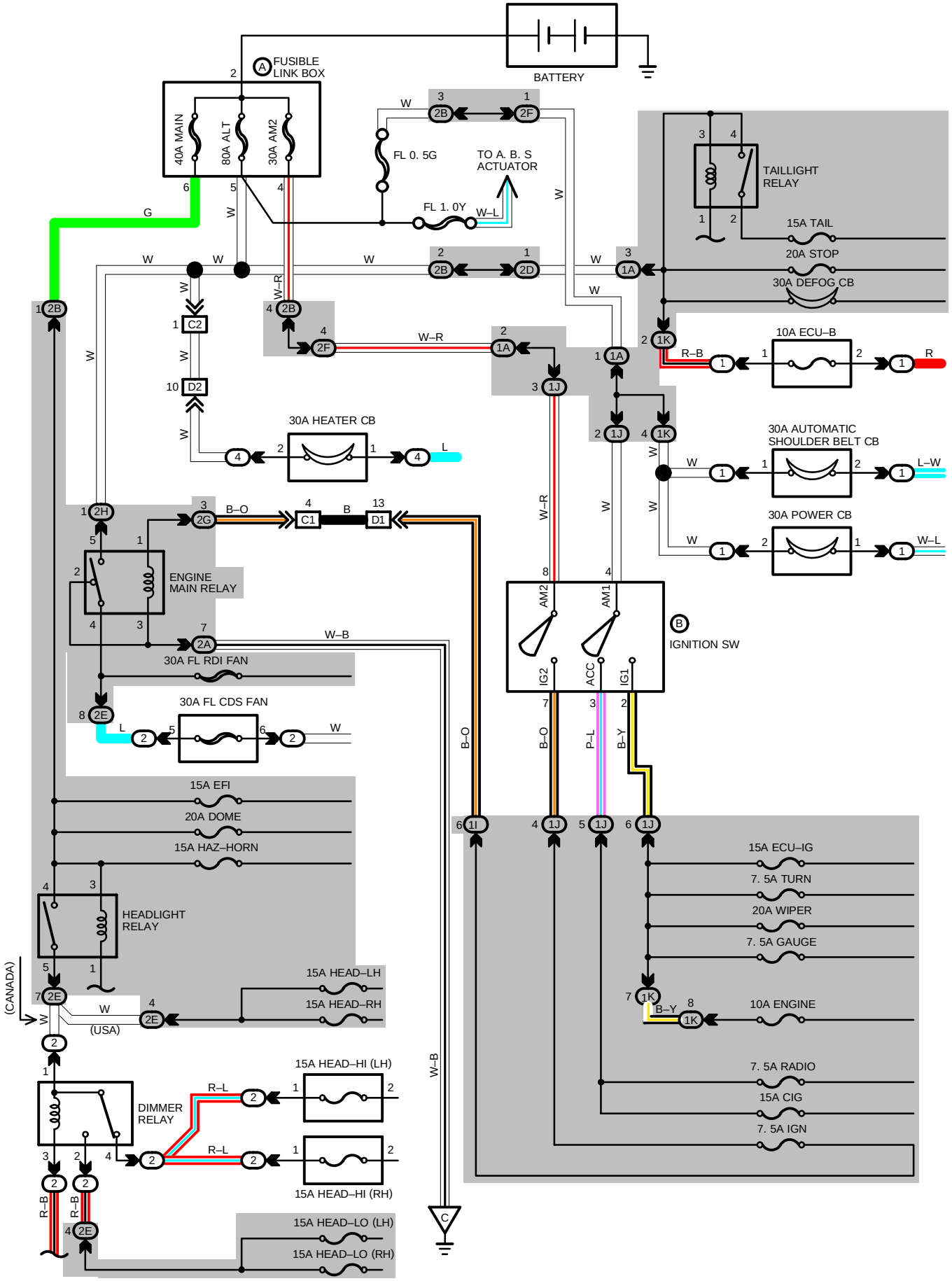

SERVICE HINTS

TAILLIGHT RELAY

2–4 : CLOSED WITH LIGHT CONTROL SW AT **TAIL** OR **HEAD** POSITION
CLOSED WITH ENGINE RUNNING

ENGINE MAIN RELAY

CHANGED WITH IGNITION SW AT **ON** OR **ST** POSITION

HEADLIGHT RELAY

4–5 : CLOSED WITH LIGHT CONTROL SW AT **HEAD** POSITION OR DIMMER SW AT **FLASH** POSITION
CLOSED WITH ENGINE RUNNING

(B) IGNITION SW

4–3 : CLOSED WITH IGNITION KEY AT **ACC** OR **ON** POSITION
8–7, 4–2 : CLOSED WITH IGNITION KEY AT **ON** OR **ST** POSITION

DIMMER RELAY

CHANGED FROM **HEAD (LO)** TO **HEAD (HI)** WITH DIMMER SW AT **FLASH** POSITION OR WITH HEADLIGHT RELAY **ON** AND DIMMER SW AT **HIGH** POSITION

○ : PARTS LOCATION

CODE		SEE PAGE	CODE		SEE PAGE	CODE		SEE PAGE
A	**F6**	24 (2VZ–FE), 25 (3S–FE)	**B**	**I11**	28			

▭ : RELAY BLOCKS

CODE	SEE PAGE	RELAY BLOCKS (RELAY BLOCK LOCATION)
1	23	R/B NO. 1 (LEFT KICK PANEL)
2	20	R/B NO. 2 (ENGINE COMPARTMENT LEFT)
4	23	R/B NO. 4 (RIGHT KICK PANEL)

▭ : JUNCTION BLOCK AND WIRE HARNESS CONNECTOR

CODE	SEE PAGE	JUNCTION BLOCK AND WIRE HARNESS (CONNECTOR LOCATION)
1A	18	ENGINE ROOM MAIN WIRE AND J/B NO. 1 (LEFT KICK PANEL)
1I	18	COWL WIRE AND J/B NO. 1 (LEFT KICK PANEL)
1J		
1K		
2A	20	ENGINE ROOM MAIN WIRE AND J/B NO. 2 (ENGINE COMPARTMENT LEFT)
2B	20	ENGINE WIRE AND J/B NO. 2 (ENGINE COMPARTMENT LEFT)
2D	20	ENGINE ROOM MAIN WIRE AND J/B NO. 2 (ENGINE COMPARTMENT LEFT)
2E	20	ENGINE ROOM NO. 4 WIRE AND J/B NO. 2 (ENGINE COMPARTMENT LEFT)
2F	20	ENGINE ROOM MAIN WIRE AND J/B NO. 2 (ENGINE COMPARTMENT LEFT)
2G	20	ENGINE WIRE AND J/B NO. 2 (ENGINE COMPARTMENT LEFT)
2H		

▭ : CONNECTOR JOINING WIRE HARNESS AND WIRE HARNESS

CODE	SEE PAGE	JOINING WIRE HARNESS AND WIRE HARNESS (CONNECTOR LOCATION)
C1	30 (2VZ–FE) 32 (3S–FE)	ENGINE ROOM MAIN WIRE AND ENGINE WIRE (NEAR J/B NO. 2)
C2	30 (2VZ–FE) 32 (3S–FE)	ENGINE ROOM MAIN WIRE AND ENGINE WIRE (NEAR WIPER MOTOR)
D1	30 (2VZ–FE) 32 (3S–FE)	ENGINE ROOM WIRE AND COWL WIRE (LEFT KICK PANEL)
D2	30 (2VZ–FE) 32 (3S–FE)	ENGINE ROOM WIRE AND COWL WIRE (RIGHT KICK PANEL)

▽ : GROUND POINTS

CODE	SEE PAGE	GROUND POINTS LOCATION
C	30 (2VZ–FE) 32 (3S–FE)	RADIATOR LEFT

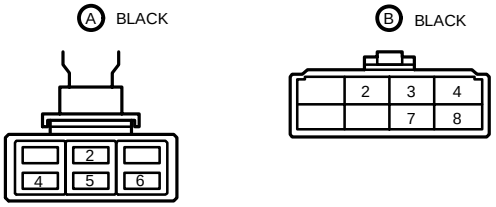

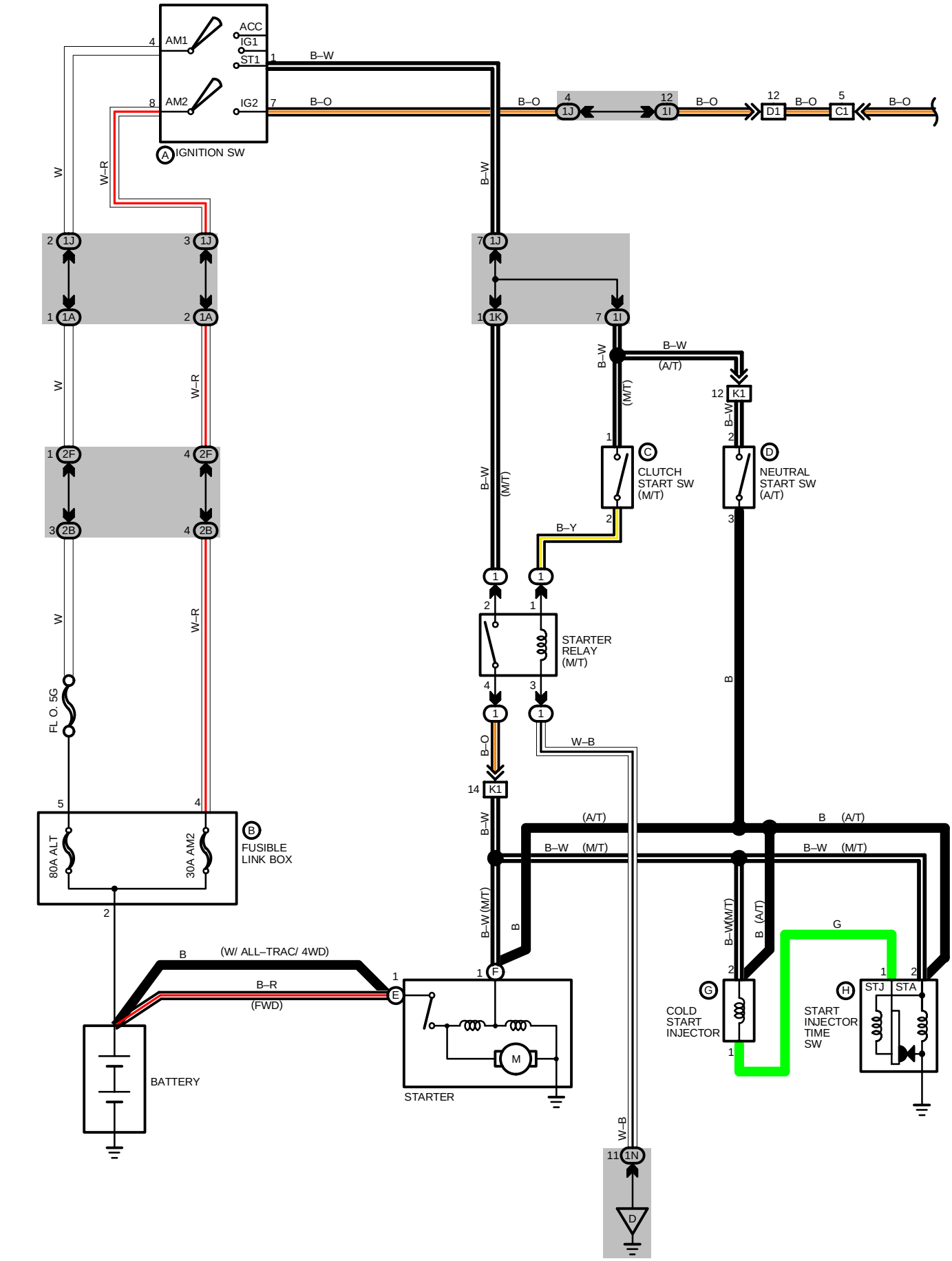
ACC
IG1
ST1
IG2
AM1
AM2
IGNITION SW
B–W
B–O
W
W–R
B–Y
W–B
B
(A/T)
(M/T)
CLUTCH START SW (M/T)
NEUTRAL START SW (A/T)
STARTER RELAY (M/T)
FL O. 5G
80A ALT
30A AM2
FUSIBLE LINK BOX
(W/ ALL–TRAC/ 4WD)
B–R
(FWD)
BATTERY
STARTER
COLD START INJECTOR
START INJECTOR TIME SW
STJ
STA
G

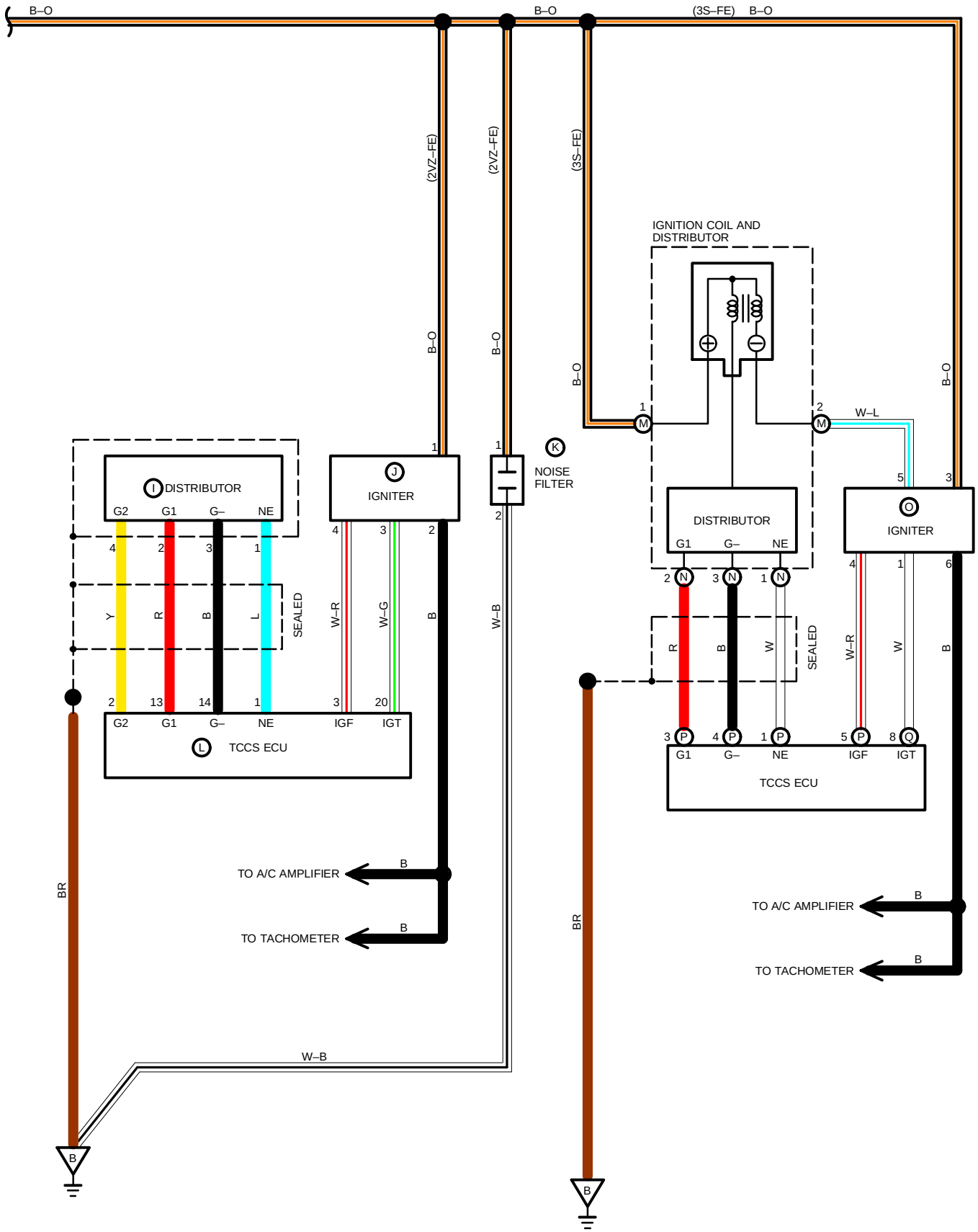
B–O
B–O
(3S–FE) B–O
(2VZ–FE)
(2VZ–FE)
(3S–FE)
B–O
B–O
B–O
B–O
IGNITION COIL AND DISTRIBUTOR
W–L
NOISE FILTER
K
I DISTRIBUTOR
G2 G1 G– NE
J IGNITER
IGF IGT
SEALED
Y R B L
W–R W–G B
L TCCS ECU
G2 G1 G– NE IGF IGT
DISTRIBUTOR
G1 G– NE
O IGNITER
SEALED
R B W
W–R W B
P TCCS ECU
G1 G– NE IGF IGT
TO A/C AMPLIFIER
TO TACHOMETER
TO A/C AMPLIFIER
TO TACHOMETER
W–B
W–B
BR
BR
B
B
B
B
B
B

STARTING AND IGNITION SYSTEM

SERVICE HINTS

(A) IGNITION SW
4–1 : CLOSED WITH IGNITION SW AT **ST** POSITION
8–7 : CLOSED WITH IGNITION SW AT **ON** OR **ST** POSITION

(C) CLUTCH START SW
2–1 : CLOSED WITH CLUTCH PEDAL FULLY DEPRESSED

STARTER RELAY
(1) 2–**(1)** 4 : CLOSED WITH CLUTCH START SW ON AND IGNITION SW AT **ST** POSITION

STARTER
POINTS CLOSED WITH CLUTCH START SW ON AND IGNITION SW AT **ST** POSITION

(D) NEUTRAL START SW (A/T)
2–3 : CLOSED WITH A/T SHIFT LEVER IN **P** OR **N** POSITION

(G) COLD START INJECTOR
2–1 : VOLT WHILE START INJECTOR TIME SW IS CLOSED AND STARTER CRANKING

(H) START INJECTOR TIME SW
POINTS OPEN ABOVE **35**˚C (**95**˚F)
2–1 : APPROX. **20–40** Ω BELOW **30**˚C (**86**˚F)
2–1 : APPROX. **40–60** Ω ABOVE **40**˚C (**104**˚F)
2–GROUND : APPROX. **20–80** Ω

: PARTS LOCATION

CODE		SEE PAGE	CODE		SEE PAGE	CODE		SEE PAGE
A	I11	28	**G**	C2	24 (2VZ–FE), 25 (3S–FE)	**M**	D8	25
B	F6	24 (2VZ–FE), 25 (3S–FE)	**H**	S2	24 (2VZ–FE), 25 (3S–FE)	**N**	D9	25
C	C10	28	**I**	D7	24	**O**	I2	25
D	N1	24 (2VZ–FE), 25 (3S–FE)	**J**	I3	24	**P**	T3	28
E	S4	24 (2VZ–FE), 25 (3S–FE)	**K**	N2	24	**Q**	T4	28
F	S3	24 (2VZ–FE), 25 (3S–FE)	**L**	T4	28			

: JUNCTION BLOCK AND WIRE HARNESS CONNECTOR

CODE	SEE PAGE	JUNCTION BLOCK AND WIRE HARNESS (CONNECTOR LOCATION)
1A	18	ENGINE ROOM MAIN WIRE AND J/B NO. 1 (LEFT KICK PANEL)
1I	18	COWL WIRE AND J/B NO. 1 (LEFT KICK PANEL)
1J	18	
1K	18	
2B	20	ENGINE WIRE AND J/B NO. 2 (ENGINE COMPARTMENT LEFT)
2F	20	ENGINE ROOM MAIN WIRE AND J/B NO. 2 (ENGINE COMPARTMENT LEFT)

: CONNECTOR JOINING WIRE HARNESS AND WIRE HARNESS

CODE	SEE PAGE	JOINING WIRE HARNESS AND WIRE HARNESS (CONNECTOR LOCATION)
C1	30 (2VZ–FE) 32 (3S–FE)	ENGINE ROOM MAIN WIRE AND ENGINE WIRE (NEAR J/B NO. 2)
D1	30 (2VZ–FE) 32 (3S–FE)	ENGINE ROOM WIRE AND COWL WIRE (LEFT KICK PANEL)
K1	34	ENGINE WIRE AND COWL WIRE (BEHIND GLOVE BOX)

: GROUND POINTS

CODE	SEE PAGE	GROUND POINTS LOCATION
B	30 (2VZ–FE) 32 (3S–FE)	INTAKE MANIFOLD
D	34	J/B NO. 1 SET BOLT

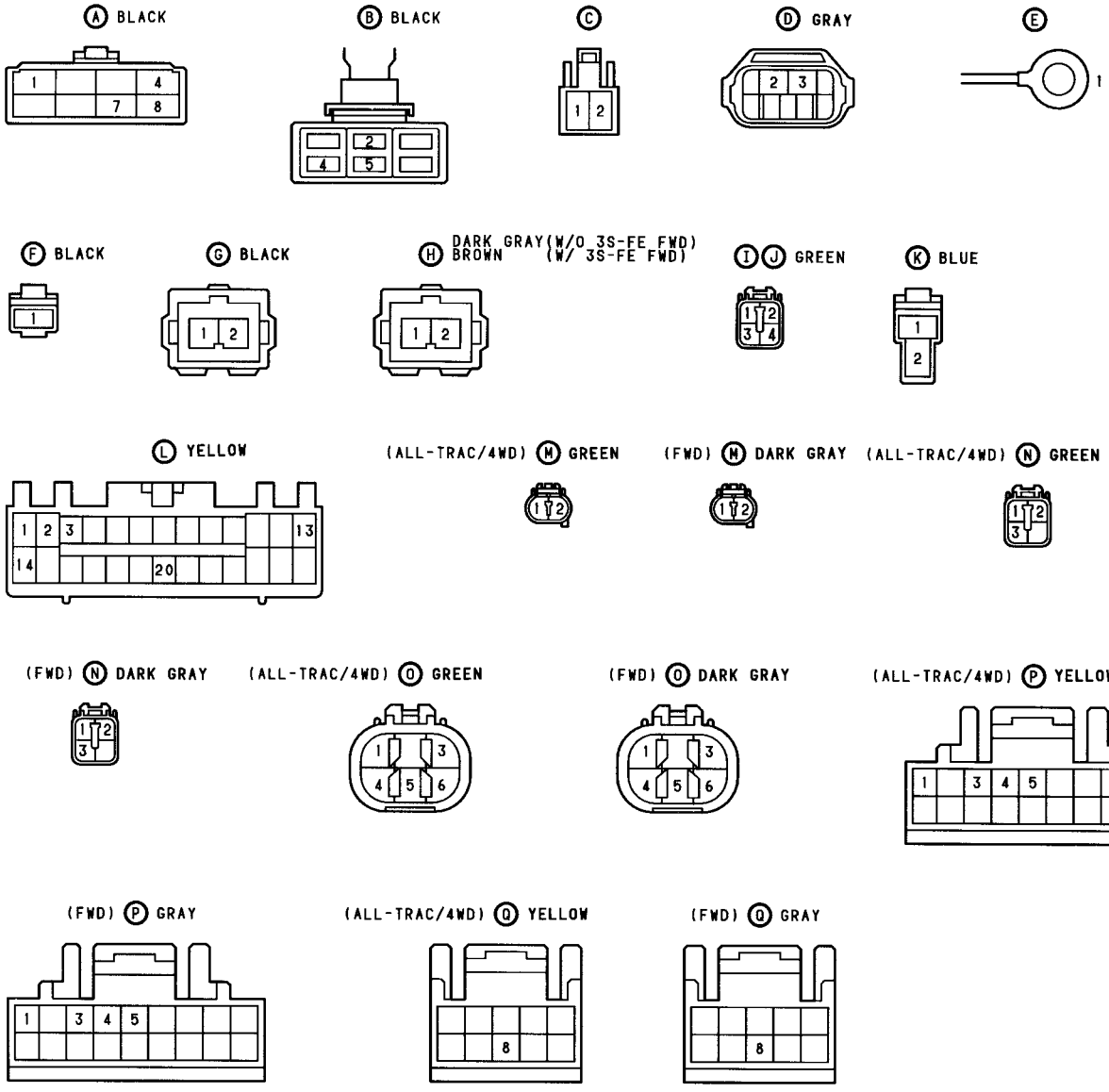
Ⓐ BLACK
Ⓑ BLACK
Ⓒ
Ⓓ GRAY
Ⓔ
Ⓕ BLACK
Ⓖ BLACK
Ⓗ DARK GRAY(W/O 3S-FE FWD)
BROWN (W/ 3S-FE FWD)
ⒾⒿ GREEN
Ⓚ BLUE
Ⓛ YELLOW
(ALL-TRAC/4WD) Ⓜ GREEN
(FWD) Ⓜ DARK GRAY
(ALL-TRAC/4WD) Ⓝ GREEN
(FWD) Ⓝ DARK GRAY
(ALL-TRAC/4WD) Ⓞ GREEN
(FWD) Ⓞ DARK GRAY
(ALL-TRAC/4WD) Ⓟ YELLOW
(FWD) Ⓟ GRAY
(ALL-TRAC/4WD) Ⓠ YELLOW
(FWD) Ⓠ GRAY

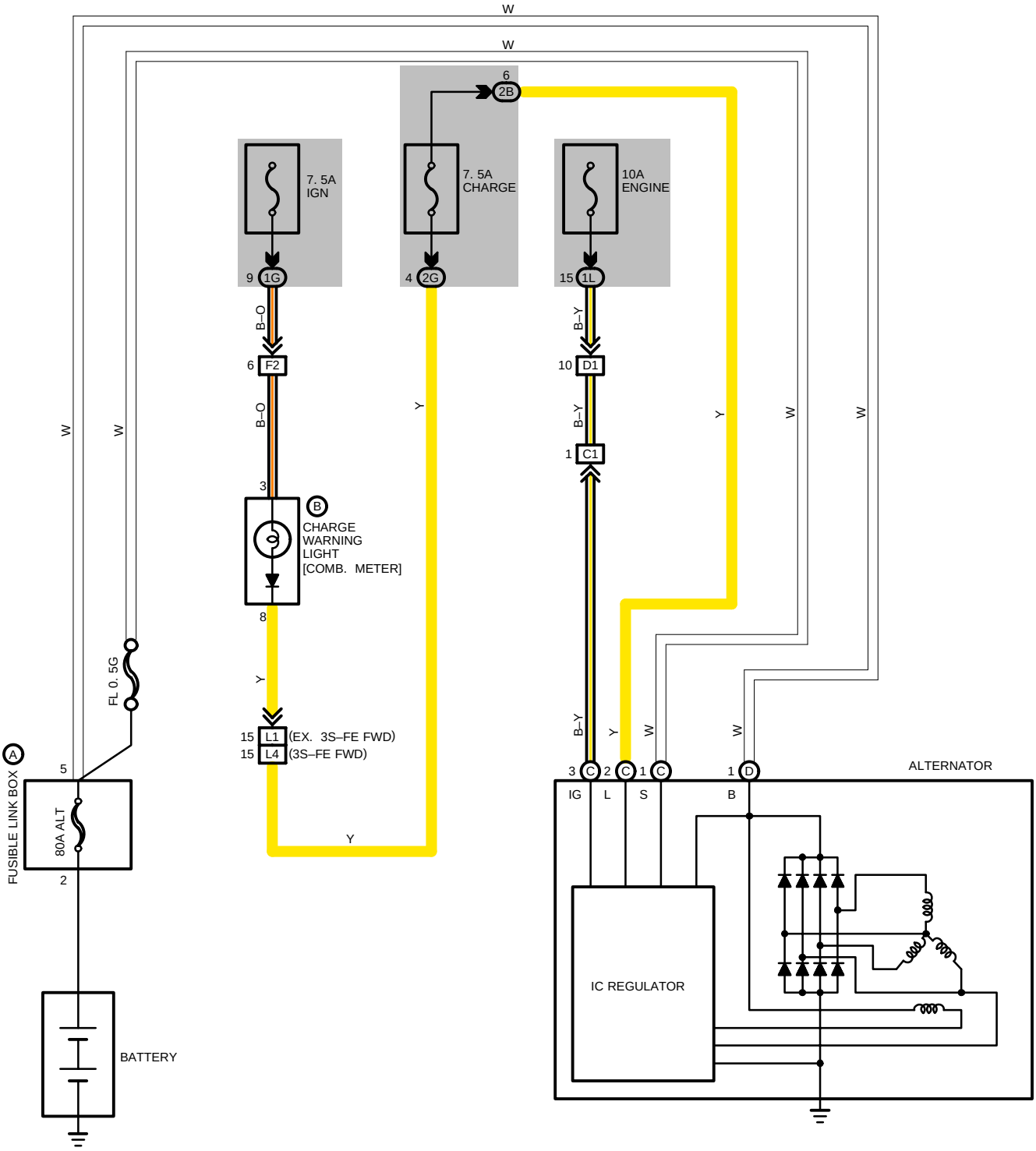
W
W
6
2B
7. 5A
IGN
7. 5A
CHARGE
10A
ENGINE
9 1G
4 2G
15 1L
B–O
B–O
B–Y
B–Y
6 F2
10 D1
1 C1
3
B
CHARGE
WARNING
LIGHT
[COMB. METER]
8
Y
Y
Y
W
W
W
FL 0. 5G
A
5
FUSIBLE LINK BOX
80A ALT
2
15 L1
15 L4
(EX. 3S–FE FWD)
(3S–FE FWD)
B–Y
Y
W
W
3 C
2 C
1 C
1 D
ALTERNATOR
IG
L
S
B
IC REGULATOR
BATTERY

SERVICE HINTS

ALTERNATOR

(C) 1–GROUND : **13.9**–**15.1** VOLTS WITH ENGINE RUNNING AT **2000** RPM AND **25**˚C (**77**˚F)
13.5–**14.3** VOLTS WITH ENGINE RUNNING AT **2000** RPM AND **115**˚C (**239**˚F)
(C) 2–GROUND : **0**–**4** VOLTS WITH IGNITION SW AT **ON** POSITION AND ENGINE NOT RUNNING

: PARTS LOCATION

CODE		SEE PAGE	CODE		SEE PAGE	CODE		SEE PAGE
A	F6	24 (2VZ–FE), 25 (3S–FE)	**C**	A17	24 (2VZ–FE), 25 (3S–FE)			
B	C11	28	**D**	A16	24 (2VZ–FE), 25 (3S–FE)			

: JUNCTION BLOCK AND WIRE HARNESS CONNECTOR

CODE	SEE PAGE	JUNCTION BLOCK AND WIRE HARNESS (CONNECTOR LOCATION)
1G	18	COWL SUB WIRE AND J/B NO. 1 (LEFT KICK PANEL)
1L	18	COWL WIRE AND J/B NO. 1 (LEFT KICK PANEL)
2B	20	ENGINE WIRE AND J/B NO. 2 (ENGINE COMPARTMENT LEFT)
2G		

: CONNECTOR JOINING WIRE HARNESS AND WIRE HARNESS

CODE	SEE PAGE	JOINING WIRE HARNESS AND WIRE HARNESS (CONNECTOR LOCATION)
C1	30 (2VZ–FE)	ENGINE ROOM MAIN WIRE AND ENGINE WIRE (NEAR J/B NO. 2)
	32 (3S–FE)	
D1	30 (2VZ–FE)	ENGINE ROOM WIRE AND COWL WIRE (LEFT KICK PANEL)
	32 (3S–FE)	
F2	34	INSTRUMENT PANEL WIRE AND COWL SUB WIRE (LEFT KICK PANEL)
L1	34	ENGINE WIRE AND INSTRUMENT PANEL WIRE (BEHIND GLOVE BOX)

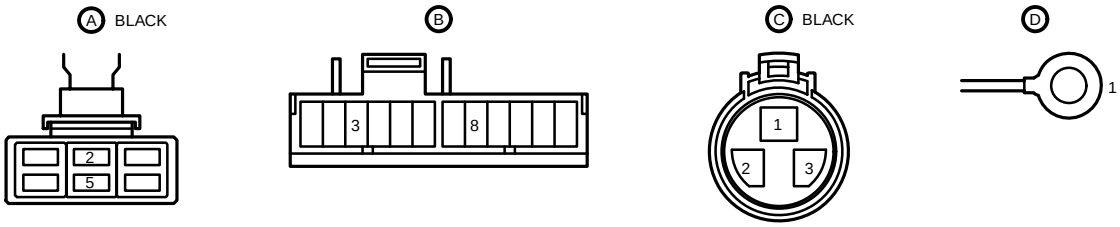

SYSTEM OUTLINE

THE TCCS SYSTEM UTILIZES A MICROCOMPUTER AND MAINTAINS OVERALL CONTROL OF THE E/G, T/M, ETC. AN OUTLINE OF ENGINE CONTROL IS GIVEN HERE.

1. INPUT SIGNALS

(1) WATER TEMP. SIGNAL SYSTEM

THE WATER TEMP. SENSOR DETECTS THE E/G COOLANT TEMP. AND HAS A BUILT–IN THERMISTOR WITH A RESISTANCE WHICH VARIES ACCORDING TO THE WATER TEMP. THUS THE WATER TEMP. IS INPUT IN THE FORM OF A CONTROL SIGNAL TO TERMINAL THW OF THE TCCS ECU.

(2) INTAKE AIR TEMP. SIGNAL SYSTEM

THE INTAKE AIR TEMP. SENSOR IS INSTALLED INSIDE THE AIR FLOW METER AND DETECTS THE INTAKE AIR TEMP., WHICH IS INPUT AS A CONTROL SIGNAL TO TERMINAL THA OF THE ECU.

(3) OX SENSOR SIGNAL SYSTEM

THE OXYGEN DENSITY IN THE EXHAUST EMISSIONS IS DETECTED AND INPUT AS A CONTROL SIGNAL TO TERMINAL OX1 OF THE ECU.

(4) RPM SIGNAL SYSTEM

CRANKSHAFT POSITION IS DETECTED BY THE PICK–UP COIL INSTALLED INSIDE THE DISTRIBUTOR. CRANKSHAFT POSITION IS INPUT AS A CONTROL SIGNAL TO TERMINAL G1 OF THE ECU, AND RPM IS INPUT TO TERMINAL NE FROM THE IGNITER.

(5) THROTTLE SIGNAL SYSTEM

THE THROTTLE POSITION SENSOR DETECTS THE THROTTLE VALVE OPENING ANGLE, WHICH IS INPUT AS A CONTROL SIGNAL TO TERMINAL VTA (W/ECT), PSW (W/O ECT) OF THE ECU, OR WHEN THE VALVE IS FULLY CLOSED, TO TERMINAL IDL.

(6) VEHICLE SPEED SIGNAL SYSTEM

THE SPEED SENSOR, INSTALLED INSIDE THE COMBINATION METER, DETECTS THE VEHICLE SPEED AND INPUTS A CONTROL SIGNAL TO TERMINAL SPD OF THE ECU.

(7) A/C SW SIGNAL SYSTEM

THE OPERATING VOLTAGE OF THE A/C MAGNET CLUTCH IS DETECTED AND INPUT IN THE FORM OF A CONTROL SIGNAL TO TERMINAL A/C OF THE ECU.

(8) BATTERY SIGNAL SYSTEM

VOLTAGE IS CONSTANTLY APPLIED TO TERMINAL BATT OF THE ECU. WHEN THE IGNITION SW IS TURNED TO ON, VOLTAGE FOR ECU OPERATION IS APPLIED VIA THE EFI MAIN RELAY TO TERMINALS +B AND +B1 OF THE ECU.

(9) INTAKE AIR VOLUME SIGNAL SYSTEM

INTAKE AIR VOLUME IS DETECTED BY THE POTENTIOMETER INSTALLED INSIDE THE AIR FLOW METER AND IS INPUT AS A CONTROL SIGNAL TO TERMINAL VS OF THE ECU. INSIDE THE AIR FLOW METER THERE IS ALSO A SW FOR FUEL PUMP OPERATION, AND WHEN THE MEASURING PLATE OPENS (AIR INTAKE OCCURS), THIS SW TURNS ON AND CURRENT FLOWS TO THE FUEL PUMP TO OPERATE IT.

(10) STOP LIGHT SW SIGNAL SYSTEM

THE STOP LIGHT SW IS USED TO DETECT WHETHER OR NOT THE VEHICLE IS BRAKING AND THE INFORMATION IS INPUT AS A CONTROL SIGNAL TO TERMINAL STP OF THE ECU.

(11) STA SIGNAL SYSTEM

TO CONFIRM THAT THE E/G IS CRANKING, THE VOLTAGE APPLIED TO THE STARTER MOTOR DURING CRANKING IS DETECTED AND IS INPUT AS A CONTROL SIGNAL TO TERMINAL STA OF THE ECU.

(12) NEUTRAL START SW SIGNAL SYSTEM

THE NEUTRAL START SW DETECTS WHETHER THE SHIFT POSITION IS IN NEUTRAL OR NOT, AND INPUTS A CONTROL SIGNAL TO TERMINAL NSW OF THE ECU.

(13) ELECTRICAL IDLE–UP SYSTEM

THE SIGNAL WHEN SYSTEMS SUCH AS THE REAR WINDOW DEFOGGER, HEADLIGHTS, ETC. WHICH CAUSE A HIGH ELECTRICAL BURDEN ARE ON IS INPUT TO TERMINAL ELS AS A CONTROL SIGNAL.

2. CONTROL SYSTEM

* EFI (ELECTRONIC FUEL INJECTION) SYSTEM

THE EFI SYSTEM MONITORS THE ENGINE CONDITIONS THROUGH THE SIGNALS EACH SENSOR (INPUT SIGNALS [1] TO [12]) INPUTS TO THE ECU. BASED ON THIS DATA AND THE PROGRAM MEMORIZED IN THE ECU, THE MOST APPROPRIATE FUEL INJECTION TIMING IS DECIDED AND CURRENT IS OUTPUT TO TERMINALS #10 AND #20 OF THE ECU, CAUSING THE INJECTORS TO OPERATE (TO INJECT FUEL). IT IS THIS SYSTEM WHICH, THROUGH THE WORK OF THE ECU, FINELY CONTROLS FUEL INJECTION IN RESPONSE TO DRIVING CONDITIONS.

* ESA (ELECTRONIC SPARK ADVANCE) SYSTEM

THE ESA SYSTEM MONITORS THE ENGINE CONDITIONS USING THE SIGNALS (INPUT SIGNALS [1, 3, 4, 6, 7, 9, 11]) INPUT TO THE ECU FROM EACH SENSOR. BASED ON THIS DATA AND THE PROGRAM MEMORIZED IN THE ECU, THE MOST APPROPRIATE IGNITION TIMING IS DECIDED AND CURRENT IS OUTPUT TO TERMINAL IGT OF THE ECU. THIS OUTPUT CONTROLS THE IGNITER TO PRODUCE THE MOST APPROPRIATE IGNITION TIMING FOR THE DRIVING CONDITIONS.

* ISC (IDLE SPEED CONTROL) SYSTEM

THE ISC SYSTEM (ROTARY SOLENOID TYPE) INCREASES THE RPM AND PROVIDES IDLING STABILITY FOR FAST IDLE–UP WHEN THE E/G IS COLD AND WHEN THE IDLE SPEED HAS DROPPED DUE TO ELECTRICAL LOAD, ETC. THE ECU EVALUATES THE SIGNALS FROM EACH SENSOR (INPUT SIGNALS [1, 4, TO 8, 11, 12, 13,]), OUTPUTS CURRENT TO TERMINALS ISC1 AND ISC2, AND CONTROLS THE ISC VALVE.

3. DIAGNOSIS SYSTEM

WITH THE DIAGNOSIS SYSTEM, WHEN THERE IS A MALFUNCTION IN THE ECU SIGNAL SYSTEM, THE MALFUNCTIONING SYSTEM IS RECORDED IN THE MEMORY. THE MALFUNCTIONING SYSTEM CAN THEN BE FOUND BY READING THE DISPLAY (CODE) OF THE CHECK ENGINE WARNING LIGHT.

4. FAIL–SAFE SYSTEM

WHEN A MALFUNCTION OCCURS IN ANY SYSTEM, IF THERE IS A POSSIBILITY OF ENGINE TROUBLE BEING CAUSED BY CONTINUED CONTROL BASED ON THE SIGNALS FROM THAT SYSTEM. THE FAIL–SAFE SYSTEM EITHER CONTROLS THE SYSTEM BY USING DATA (STANDARD VALUES) RECORDED IN THE ECU MEMORY OR ELSE STOPS THE ENGINE.

SERVICE HINTS

(B) (C) (D) (E) INJECTOR

1–2 : APPROX **13.8** Ω

EFI MAIN RELAY

2–4 : CLOSED WITH IGNITION SW AT **ON** OR **ST** POSITION

(H) CIRCUIT OPENING RELAY

1–2 : CLOSED WITH STARTER RUNNING OR MEASURING PLATE (AIR FLOW METER) OPEN

(Q) AIR FLOW METER

1–2 : CLOSED WITH STARTER RUNNING MEASURING PLATE OPEN
5–6 : **200**–**600** Ω (MEASURING PLATE FULLY CLOSED) **20**–**1200** Ω (MEASURING PLATE FULLY OPEN)
5–4 : **200**–**400** Ω
5–7 : **10**–**20** KΩ (**–20**˚C, **–4**˚F)
4–**7** KΩ (**0**˚C, **32**˚F)
2–**3** KΩ (**20**˚C, **68**˚F)
0.9–**1.3** KΩ (**40**˚C, **104**˚F)
0.4–**0.7** KΩ (**60**˚C, **140**˚F)

THROTTLE POSITION SENSOR

(T) 2–4, : **0.2**–**0.8** KΩ WITH CLEARANCE BETWEEN LEVER AND
(S) 3–2 STOP SCREW **0** MM **(0** IN**)**
(T) 3–4, : **2.3** KΩ OR LESS WITH CLEARANCE BETWEEN LEVER AND
(S) 1–2 STOP SCREW **0.5** MM (**0.020** IN) ∞ Ω WITH **0.7** MM (**0.028** IN)
(T) 2–4, **(S)** 3–2 : **3.3–10** KΩ WITH THROTTLE VALVE FULLY OPEN
(T) 1–**(T)** 4 : **3–7** KΩ

(R) EFI WATER TEMP. SENSOR

1–2 : **10**–**20** KΩ (**–20**˚C, **–4**˚F)
4–**7** KΩ (**0**˚C, **32**˚F)
2–**3** KΩ (**20**˚C, **68**˚F)
0.9–**1.3** KΩ (**40**˚C, **104**˚F)
0.4–**0.7** KΩ (**60**˚C, **140**˚F)
0.2–**0.4** KΩ (**80**˚C, **176**˚F)

TCCS ECU (ELECTRONIC CONTROLLED UNIT)

VOLTAGES AT ECU CONNECTORS

(M) 2–**(O)** 7 : **10**–**14** VOLTS (ALWAYS)
(M) 1,8–**(O)** 7 : **10**–**14** VOLTS (IGNITION SW ON)
(N) 6–**(O)** 7 : **8**–**14** VOLTS (IGNITION SW ON AND THROTTLE VALVE OPEN)
(M) 5–**(N)** 14 : **4**–**6** VOLTS (IGNITION SW ON)
(M) 4–**(N)** 14 : **4**–**5** VOLTS (IGNITION SW ON AND MEASURING PLATE FULLY CLOSED)
0.02–**0.5** VOLTS (IGNITION SW ON AND MEASURING PLATE FULLY OPEN)
2–**4** VOLTS (IDLING)
(M) 3–**(N)** 14 : **1**–**3** VOLTS (IGNITION SW ON AND INTAKE AIR TEMP. **20**˚C, **68**˚F)
(N) 10–**(N)** 14 : **0.1**–**1.0** VOLTS (IGNITION SW ON AND COOLANT TEMP. **80**˚C, **176**˚F)
(O) 3–**(O)** 7 : **6**–**14** VOLTS (ENGINE CRANKING)
(N)9, 18–**(O)**7 : **9**–**14** VOLTS (IGNITION SW ON)
(O) 8–**(O)** 7 : **0.7**–**1.0** VOLTS (IDLING)
(N) 7–**(O)** 7 : **0.5** OR LESS (IGNITION SW ON AND CHECK CONNECTOR T–E1 SHORT)
: **10**–**14** VOLTS (IGNITION SW ON AND CHECK CONNECTOR T–E1 NOT SHORT)
(N) 15–**(O)** 7 : **8**–**14** VOLTS (IGNITION SW ON AND A/C SW ON)
(N) 8–**(O)** 7 : **8**–**14** VOLTS (NO TROUBLE ("CHECK" ENGINE WARNING LIGHT OFF) AND ENGINE RUNNING)
(N)11–**(N)**14 : **0.1**–**1.0** VOLTS (IGNITION SW ON AND THROTTLE VALVE FULLY CLOSED)
10–**14** VOLTS (IGNITION SW ON AND THROTTLE VALVE FULLY OPEN)
(N) 11–**(O)** 7 : **4**–**5** VOLTS (IGNITION SW ON AND THROTTLE VALVE FULLY CLOSED)
(N) 6–**(N)** 14 : **8**–**14** VOLTS (IGNITION SW ON AND THROTTLE VALVE OPEN)
(O) 4–**(O)** 5 : **9**–**14** VOLTS (IGNITION SW ON)
(O) 9–**(O)** 10 : **4**–**5** VOLTS (IGNITION SW ON AND THROTTLE
(N) 16–**(O)** 7 : VALVE FULLY CLOSED)

RESISTANCE AT COMPUTER

(DISCONNECT WIRING CONNECTOR)

(N) 6–**(N)** 14 : ∞ Ω (THROTTLE VALVE OPEN) LESS THAN **2.3** KΩ (THROTTLE VALVE FULLY CLOSED)
(N) 11–**(N)** 14 : **3.3**–**10** KΩ (THROTTLE VALVE FULLY OPEN) **0.2**–**0.8** KΩ (THROTTLE VALVE FULLY CLOSED)
(N) 6–**(O)** 7 : ∞ Ω (THROTTLE VALVE FULLY OPEN) **0** Ω (THROTTLE VALVE FULLY CLOSED)
(N) 11–**(O)** 7 : **0** Ω (THROTTLE VALVE FULLY OPEN) ∞ Ω (THROTTLE VALVE FULLY CLOSED)
(M) 4–**(N)** 14 : **20**–**400** Ω (MEASURING PLATE FULLY CLOSED) **20**–**3000** Ω (MEASURING PLATE FULLY OPEN)
(M) 3–**(N)** 14 : **2**–**3** KΩ (INTAKE AIR TEMP. **20**˚C, **68**˚F)
(N) 10–**(N)** 14 : **0.2**–**0.4** KΩ (COOLANT TEMP. **80**˚C, **176**˚F)
(N) 3–**(N)** 4 : **140**–**180** Ω

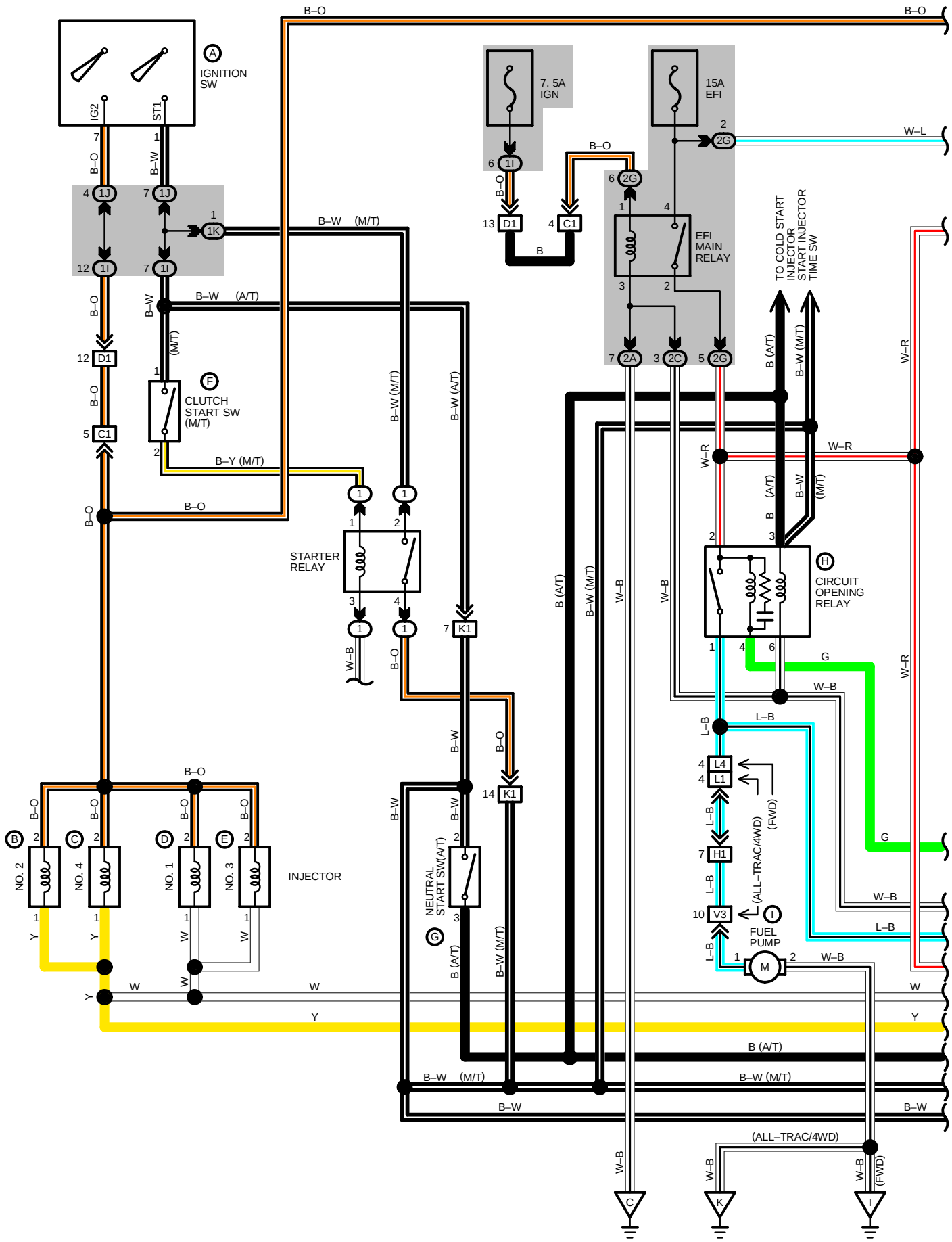
IGNITION SW
IG2
ST1
7. 5A IGN
15A EFI
EFI MAIN RELAY
TO COLD START INJECTOR
START INJECTOR TIME SW
CLUTCH START SW (M/T)
STARTER RELAY
CIRCUIT OPENING RELAY
INJECTOR
NO. 2
NO. 4
NO. 1
NO. 3
NEUTRAL START SW(A/T)
FUEL PUMP
(ALL–TRAC/4WD)
(FWD)
B–O
B–W
W–L
W–R
W–B
L–B
G
Y
W
B (A/T)
B–W (M/T)
B–W (A/T)
B–W (M/T)
B–W (A/T)
B–Y (M/T)

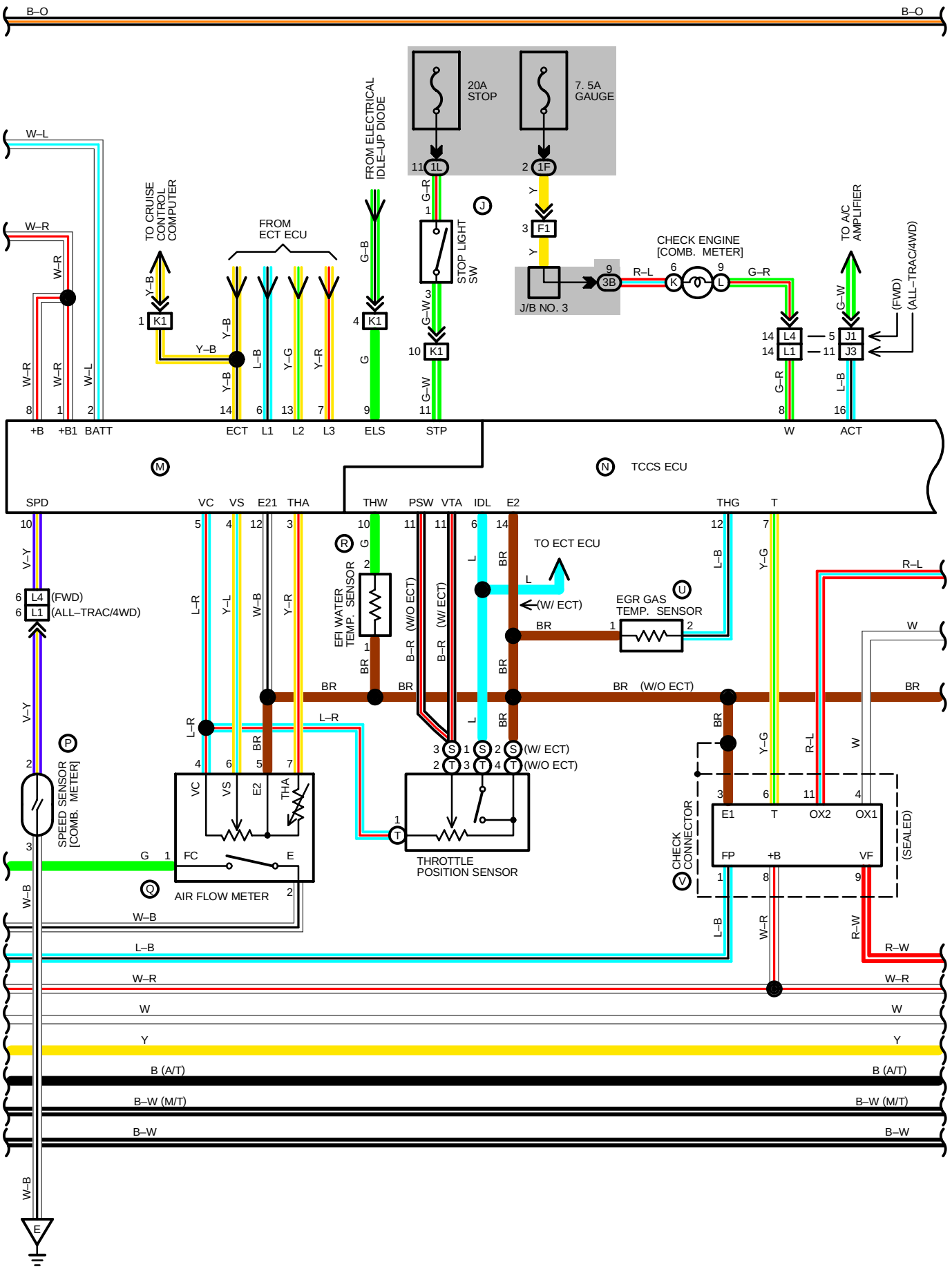

B–O
B–O
20A STOP
7. 5A GAUGE
FROM ELECTRICAL IDLE–UP DIODE
TO CRUISE CONTROL COMPUTER
FROM ECT ECU
STOP LIGHT SW
CHECK ENGINE [COMB. METER]
TO A/C AMPLIFIER
J/B NO. 3
(FWD)
(ALL–TRAC/4WD)
+B
+B1
BATT
ECT
L1
L2
L3
ELS
STP
W
ACT
TCCS ECU
SPD
VC
VS
E21
THA
THW
PSW
VTA
IDL
E2
THG
T
TO ECT ECU
(W/ ECT)
EGR GAS TEMP. SENSOR
EFI WATER TEMP. SENSOR
(W/O ECT)
(W/ ECT)
(W/O ECT)
(FWD)
(ALL–TRAC/4WD)
SPEED SENSOR [COMB. METER]
AIR FLOW METER
THROTTLE POSITION SENSOR
CHECK CONNECTOR
(SEALED)
E1
T
OX2
OX1
FP
+B
VF
W–L
W–R
W–B
L–B
W–R
W
Y
B (A/T)
B–W (M/T)
B–W
R–W

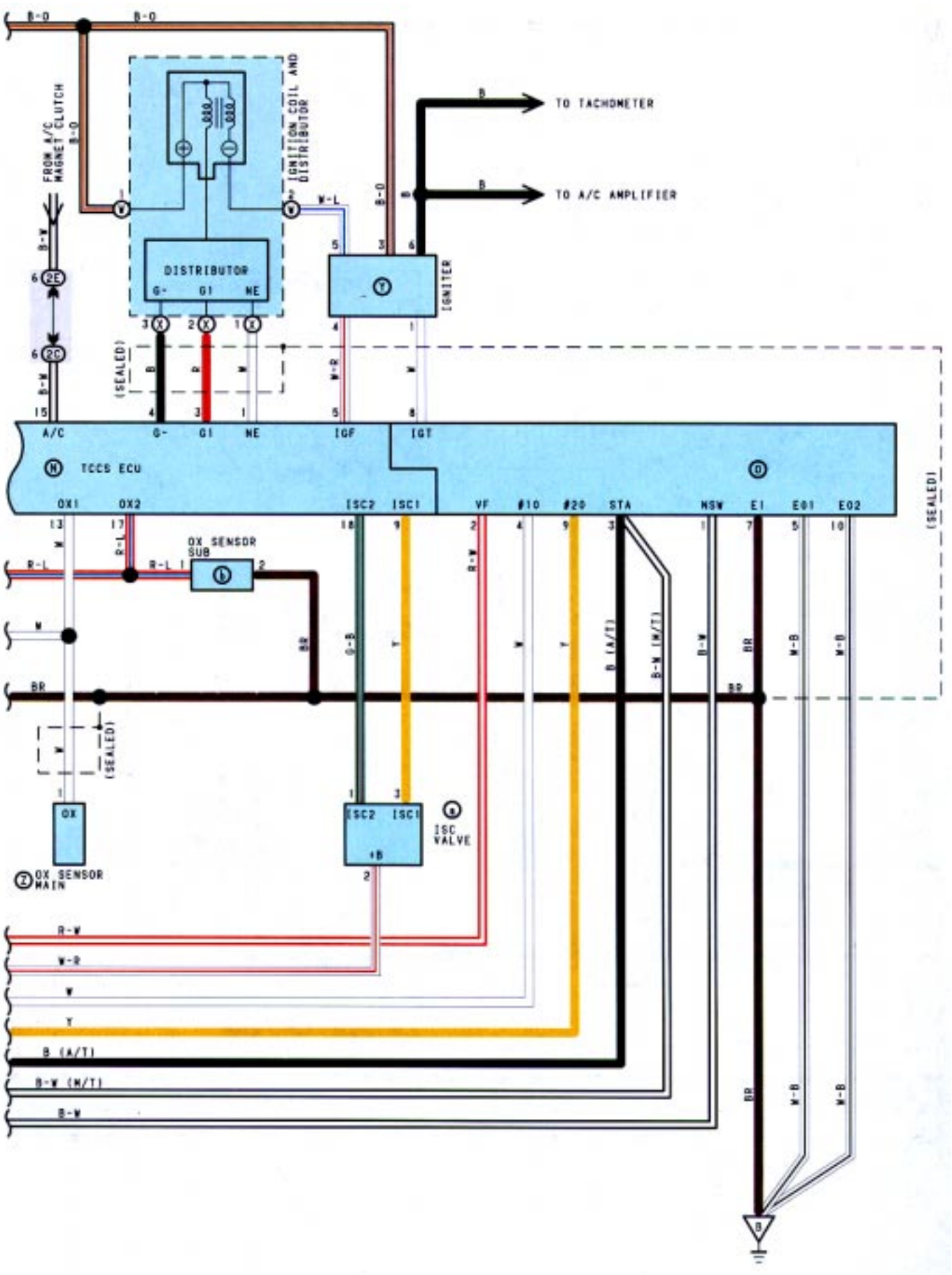
TO TACHOMETER
TO A/C AMPLIFIER
FROM A/C MAGNET CLUTCH
IGNITION COIL AND DISTRIBUTOR
DISTRIBUTOR
G-
G1
NE
IGNITER
(SEALED)
A/C
TCCS ECU
OX1
OX2
OX SENSOR SUB
ISC2
ISC1
VF
#10
#20
STA
NSW
E1
E01
E02
OX
OX SENSOR MAIN
ISC VALVE
+B

: PARTS LOCATION

CODE		SEE PAGE	CODE		SEE PAGE	CODE		SEE PAGE
A	I11	28	**K**	C13	28	**V**	C1	25
B	I5	25	**L**	C11	28	**W**	D8	25
C	I7	25	**M**	T2	28	**X**	D9	25
D	I4	25	**N**	T3	28	**Y**	I2	25
E	I6	25	**O**	T4	28	**Z**	O3	25
F	C10	28	**P**	C13	28	**a**	I1	25
G	N1	25	**Q**	A15	25	**b**	O4	25
H	C8	28	**R**	E2	25			
I	F7	26 (S/D), 27 (STATION W/G)	**S**	T1	25 (W/ECT)			
I	F8	26 (S/D ALL–TRAC/4WD)	**T**	T1	25 (W/O ECT)			
J	S9	28	**U**	E3	25			

: RELAY BLOCKS

CODE	SEE PAGE	RELAY BLOCKS (RELAY BLOCK LOCATION)
1	23	R/B NO. 1 (LEFT KICK PANEL)

: JUNCTION BLOCK AND WIRE HARNESS CONNECTOR

CODE	SEE PAGE	JUNCTION BLOCK AND WIRE HARNESS (CONNECTOR LOCATION)
1F	18	COWL SUB WIRE AND J/B NO. 1 (LEFT KICK PANEL)
1I	18	COWL WIRE AND J/B NO. 1 (LEFT KICK PANEL)
1J		
1K		
1L		
2A	20	ENGINE ROOM MAIN WIRE AND J/B NO. 2 (ENGINE COMPARTMENT LEFT)
2C	20	ENGINE WIRE AND J/B NO. 2 (ENGINE COMPARTMENT LEFT)
2E	20	ENGINE ROOM NO. 4 WIRE AND J/B NO. 2 (ENGINE COMPARTMENT LEFT)
2G	20	ENGINE WIRE AND J/B NO. 2 (ENGINE COMPARTMENT LEFT)
3B	22	INSTRUMENT PANEL WIRE AND J/B NO. 3 (INSTRUMENT PANEL LEFT)

: CONNECTOR JOINING WIRE HARNESS AND WIRE HARNESS

CODE	SEE PAGE	JOINING WIRE HARNESS AND WIRE HARNESS (CONNECTOR LOCATION)
C1	32	ENGINE ROOM MAIN WIRE AND ENGINE WIRE (NEAR J/B NO. 2)
D1	32	ENGINE ROOM WIRE AND COWL WIRE (LEFT KICK PANEL)
F1	34	INSTRUMENT PANEL WIRE AND COWL SUB WIRE (LEFT KICK PANEL)
H1	34	FLOOR NO. 1 WIRE AND INSTRUMENT PANEL WIRE (LEFT KICK PANEL)
J1	34	ENGINE WIRE AND A/C WIRE (BEHIND GLOVE BOX)
J3		
K1	34	ENGINE WIRE AND COWL WIRE (BEHIND GLOVE BOX)
L1	34	ENGINE WIRE AND INSTRUMENT PANEL WIRE (BEHIND GLOVE BOX)
L4		
V3	36	FLOOR NO. 1 WIRE AND LUGGAGE ROOM NO. 1 WIRE (ALL–TRAC/4WD, BACK PANEL LEFT)

: GROUND POINTS

CODE	SEE PAGE	GROUND POINTS LOCATION
B	32	INTAKE MANIFOLD
C	32	RADIATOR LEFT
E	34	LEFT KICK PANEL
I	36 (S/D)	LEFT REAR FENDER
	38 (STATION W/G)	
K	36 (S/D)	BACK PANEL CENTER (ALL–TRAC/4WD)

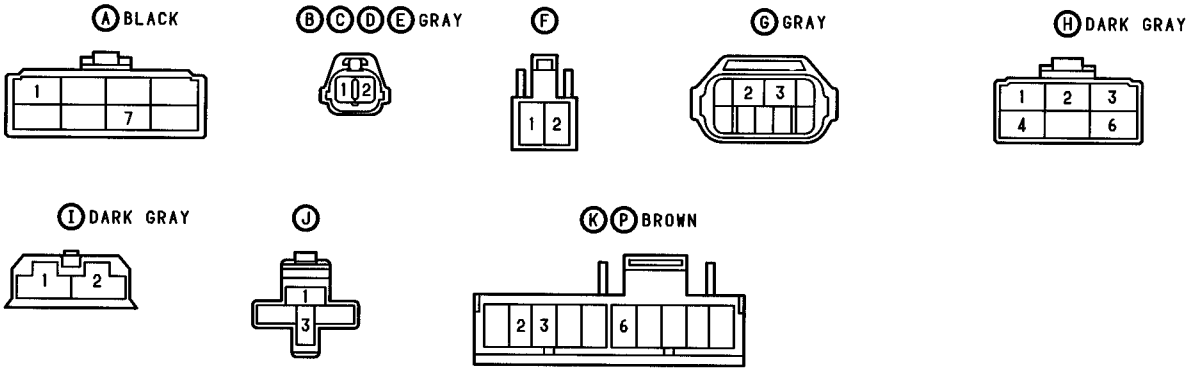

Ⓛ

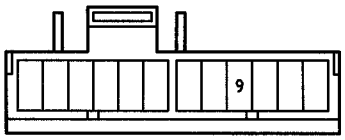

(ALL-TRAC/4WD) Ⓜ DARK GRAY

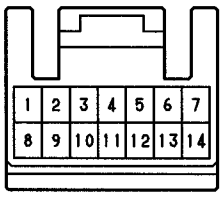

(FWD) Ⓜ DARK GRAY

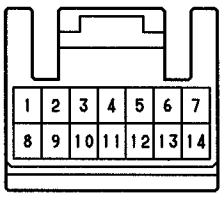

(ALL-TRAC/4WD) Ⓝ DARK GRAY

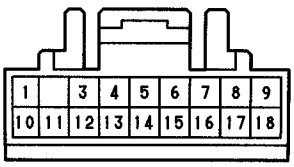

(FWD) Ⓝ DARK GRAY

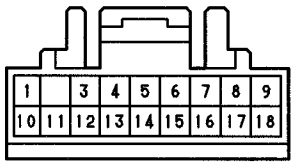

(ALL-TRAC/4WD) Ⓞ DARK GRAY

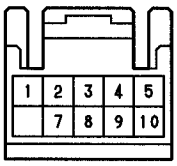

(FWD) Ⓞ DARK GRAY

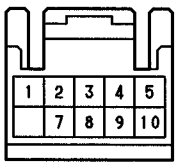

Ⓠ BLACK

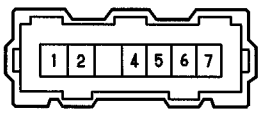

Ⓡ GREEN

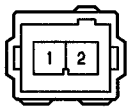

Ⓢ BLACK

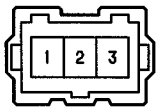

Ⓣ BLACK

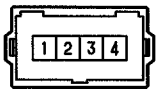

(ALL-TRAC/4WD) Ⓤ DARK GRAY



(FWD) Ⓤ DARK GRAY



Ⓥ BLACK

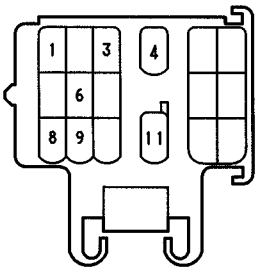

(ALL-TRAC/4WD) Ⓦ DARK GRAY



(FWD) Ⓦ DARK GRAY



(ALL-TRAC/4WD) Ⓧ DARK GRAY



(FWD) Ⓧ DARK GRAY



(ALL-TRAC/4WD) Ⓨ DARK GRAY

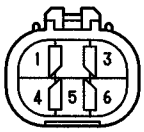

(FWD) Ⓨ DARK GRAY

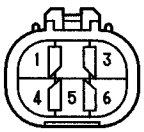

(ALL-TRAC/4WD) Ⓩ DARK GRAY



(FWD) Ⓩ DARK GRAY



ⓐ YELLOW



ⓑ DARK GRAY



SYSTEM OUTLINE

THE TCCS SYSTEM UTILIZES A MICROCOMPUTER AND MAINTAINS OVERALL CONTROL OF THE E/G, T/M, ETC. AN OUTLINE OF ENGINE CONTROL IS GIVEN HERE.

1. INPUT SIGNALS

(1) WATER TEMP. SIGNAL SYSTEM
THE WATER TEMP. SENSOR DETECTS THE E/G COOLANT TEMP. AND HAS A BUILT–IN THERMISTOR WITH A RESISTANCE WHICH VARIES ACCORDING TO THE WATER TEMP. THUS THE WATER TEMP. IS INPUT IN THE FORM OF A CONTROL SIGNAL TO TERMINAL THW OF THE TCCS ECU.

(2) INTAKE AIR TEMP. SIGNAL SYSTEM
THE INTAKE AIR TEMP. SENSOR IS INSTALLED INSIDE THE AIR FLOW METER AND DETECTS THE INTAKE AIR TEMP., WHICH IS INPUT AS A CONTROL SIGNAL TO TERMINAL THA OF THE ECU.

(3) OXYGEN SENSOR SIGNAL SYSTEM
THE OXYGEN DENSITY IN THE EXHAUST. EMISSIONS IS DETECTED AND INPUT AS A CONTROL SIGNAL TO TERMINAL OX1 OF THE ECU. TO MAINTAIN STABLE DETECTION PERFORMANCE BY THE OXYGEN SENSOR, A HEATER IS USED FOR WARMING THE SENSOR. THE HEATER IS ALSO CONTROLLED BY THE ECU (HT).

(4) RPM SIGNAL SYSTEM
CRANKSHAFT POSITION AND E/G RPM ARE DETECTED BY THE PICK–UP COIL INSTALLED INSIDE THE DISTRIBUTOR. CRANKSHAFT POSITION IS INPUT AS A CONTROL SIGNAL TO TERMINALS G1 AND G2, OF THE ECU, AND RPM IS INPUT TO TERMINAL NE.

(5) THROTTLE SIGNAL SYSTEM
THE THROTTLE POSITION SENSOR DETECTS THE THROTTLE VALVE OPENING ANGLE, WHICH IS INPUT AS A CONTROL SIGNAL TO TERMINAL VTA OF THE ECU, OR WHEN THE VALVE IS FULLY CLOSED, TO TERMINAL IDL.

(6) VEHICLE SPEED SIGNAL SYSTEM
THE SPEED SENSOR, INSTALLED INSIDE THE COMBINATION METER, DETECTS THE VEHICLE SPEED AND INPUTS A CONTROL SIGNAL TO TERMINAL SP1 OF THE ECU.

(7) NEUTRAL START SW SIGNAL SYSTEM (A/T)
THE NEUTRAL START SW DETECTS WHETHER THE SHIFT POSITION IS IN NEUTRAL OR NOT, AND INPUTS A CONTROL SIGNAL TO TERMINAL NSW OF THE ECU.

(8) A/C SW SIGNAL SYSTEM
THE OPERATING VOLTAGE OF THE A/C MAGNET CLUTCH IS DETECTED AND INPUT IN THE FORM OF A CONTROL SIGNAL TO TERMINAL A/C OF THE ECU.

(9) BATTERY SIGNAL SYSTEM
VOLTAGE IS CONSTANTLY APPLIED TO TERMINAL BATT OF THE ECU. WHEN THE IGNITION SW IS TURNED TO ON, VOLTAGE FOR ECU OPERATION IS APPLIED VIA THE EFI MAIN RELAY TO TERMINALS +B AND +B1 OF THE ECU. ALSO, CURRENT FLOWS VIA THE IGN FUSE TO TERMINAL IGSW OF THE ECU.

(10) INTAKE AIR VOLUME SIGNAL SYSTEM
INTAKE AIR VOLUME IS DETECTED BY THE POTENTIOMETER INSTALLED INSIDE THE AIR FLOW METER AND IS INPUT AS A CONTROL SIGNAL TO TERMINAL VS OF THE ECU. INSIDE THE AIR FLOW METER THERE IS ALSO A SW FOR FUEL PUMP OPERATION, AND WHEN THE MEASURING PLATE OPENS (AIR INTAKE OCCURS), THIS SW TURNS ON AND CURRENT FLOWS TO THE FUEL PUMP TO OPERATE IT.

(11) STA SIGNAL SYSTEM
TO CONFIRM THAT THE E/G IS CRANKING, THE VOLTAGE APPLIED TO THE STARTER MOTOR DURING CRANKING IS DETECTED AND IS INPUT AS A CONTROL SIGNAL TO TERMINAL STA OF THE ECU.

(12) ENGINE KNOCK SIGNAL SYSTEM
ENGINE KNOCKING IS DETECTED BY THE KNOCK SENSOR AND INPUT AS A CONTROL SIGNAL TO TERMINAL KNK OF THE ECU.

2. CONTROL SYSTEM

* EFI (ELECTRONIC FUEL INJECTION) SYSTEM

THE EFI SYSTEM MONITORS THE ENGINE CONDITIONS THROUGH THE SIGNALS EACH SENSOR (INPUT SIGNALS [1] TO [11]) INPUTS TO THE ECU. BASED ON THIS DATA AND THE PROGRAM MEMORIZED IN THE ECU, THE MOST APPROPRIATE FUEL INJECTION TIMING IS DECIDED AND CURRENT IS OUTPUT TO TERMINALS #10, #20 AND #30 OF THE ECU. CAUSING THE INJECTORS TO OPERATE (TO INJECT FUEL). IT IS THIS SYSTEM WHICH, THROUGH THE WORK OF THE ECU, FINELY CONTROLS FUEL INJECTION IN RESPONSE TO DRIVING CONDITIONS.

* ESA (ELECTRONIC SPARK ADVANCE) SYSTEM

THE ESA SYSTEM MONITORS THE ENGINE CONDITIONS USING THE SIGNALS (INPUT SIGNALS [1, 3, 4, 5, 6, 8, 10, 11, 12]) INPUT TO THE ECU FROM EACH SENSOR. BASED ON THIS DATA AND THE PROGRAM MEMORIZED IN THE ECU, THE MOST APPROPRIATE IGNITION TIMING IS DECIDED AND CURRENT IS OUTPUT TO TERMINAL IGT OF THE ECU.

THIS OUTPUT CONTROLS THE IGNITER TO PRODUCE THE MOST APPROPRIATE IGNITION TIMING FOR THE DRIVING CONDITIONS.

* OXYGEN SENSOR HEATER CONTROL SYSTEM

THE OXYGEN SENSOR HEATER CONTROL SYSTEM TURNS THE HEATER TO ON WHEN THE INTAKE AIR VOLUME IS LOW (TEMP. OF EXHAUST EMISSIONS LOW), AND WARMS UP THE OXYGEN SENSOR TO IMPROVE DETECTION PERFORMANCE OF THE SENSOR. THE ECU EVALUATES THE SIGNALS FROM EACH SENSOR (INPUT SIGNALS [1, 4, 9, 10, 11]), CURRENT IS OUTPUT TO TERMINAL HT AND CONTROLS THE HEATER.

* ISC (IDLE SPEED CONTROL) SYSTEM

THE ISC SYSTEM (STEP MOTOR TYPE) INCREASES THE RPM AND PROVIDES IDLING STABILITY FOR FAST IDLE–UP WHEN THE E/G IS COLD AND WHEN THE IDLE SPEED HAS DROPPED DUE TO ELECTRICAL LOAD, ETC. THE ECU EVALUATES THE SIGNALS FROM EACH SENSOR (INPUT SIGNALS [1, 4 TO 8, 11]), OUTPUTS CURRENT TO TERMINALS ISC1 ISC2, ISC3 AND ISC4, AND CONTROLS THE ISC VALVE.

* FUEL PRESSURE–UP SYSTEM

THE FUEL PRESSURE UP SYSTEM CAUSES THE VSV (FOR FUEL PRESSURE UP) TO COME ON FOR HIGH TEMP. STARTS AND IMMEDIATELY AFTER STARTING IN ORDER TO INCREASE THE FUEL PRESSURE, IMPROVE STARTABILITY AT HIGH TEMPERATURES AND PROVIDE STABLE IDLING. THE ECU EVALUATES THE INPUT SIGNALS FROM EACH SENSOR (1, 2, 4 AND 12), OUTPUTS CURRENT TO TERMINAL FPU AND CONTROLS THE VSV.

3. DIAGNOSIS SYSTEM

WITH THE DIAGNOSIS SYSTEM, WHEN THERE IS A MALFUNCTIONING IN THE ECU SIGNAL SYSTEM, THE MALFUNCTION SYSTEM IS RECORDED IN THE MEMORY. THE MALFUNCTIONING SYSTEM CAN THEN BE FOUND BY READING THE DISPLAY (CODE) OF THE CHECK ENGINE WARNING LIGHT.

4. FAIL–SAFE SYSTEM

WHEN A MALFUNCTION OCCURS IN ANY SYSTEM, IF THERE IS A POSSIBILITY OF ENGINE TROUBLE BEING CAUSED BY CONTINUED CONTROL BASED ON THE SIGNALS FROM THAT SYSTEM, THE FAIL–SAFE SYSTEM EITHER CONTROLS THE SYSTEM BY USING DATA (STANDARD VALUES) RECORDED IN THE ECU MEMORY OR ELSE STOPS THE ENGINE.

SERVICE HINTS

(C) (D) (E) (F) (G) (H) INJECTOR
1–2 : APPROX. **13.8** Ω

(I) NEUTRAL START SW (A/T)
2–3 : CLOSED WITH A/T SHIFT LEVER IN **P** OR **N** POSITION

EFI MAIN RELAY
4–2 : CLOSED WITH IGNITION SW AT **ON** OR **ST** POSITION

(J) CIRCUIT OPENING RELAY
2–1 : CLOSED WITH STARTER RUNNING OR MEASURING PLATE (AIR FLOW METER) OPEN

(T) AIR FLOW METER
2–1 : CLOSED WITH STARTER RUNNING OR MEASURING PLATE OPEN
5–6 : **200**–**600** Ω (MEASURING PLATE FULLY CLOSED)
20–**1200** Ω (MEASURING PLATE FULLY OPEN)
5–4 : **200**–**400** Ω
5–7 : **10**–**20** KΩ (**–20**˚C, **–4**˚F)
4–**7** KΩ (**0**˚C, **32**˚F)
2–**3** KΩ (**20**˚C, **68**˚F)
0.9–**1.3** KΩ (**40**˚C, **104**˚F)
0.4–**0.7** KΩ (**60**˚C, **140**˚F)

(U) EFI WATER TEMP. SENSOR
2–1 : **10**–**20** KΩ (**–20**˚C, **–4**˚F)
4–**7** KΩ (**0**˚C, **32**˚F)
2–**3** KΩ (**20**˚C, **68**˚F)
0.9–**1.3** KΩ (**40**˚C, **104**˚F)
0.4–**0.7** KΩ (**60**˚C, **140**˚F)
0.2–**0.4** KΩ (**80**˚C, **176**˚F)

(Y) THROTTLE POSITION SENSOR
2–4 : **0.3–6.3** KΩ WITH CLEARANCE BETWEEN LEVER AND STOP SCREW **0** MM (**0** IN.)
3–4 : LESS THAN **2.3** KΩ WITH CLERANCE BETWEEN LEVER AND STOP SCREW **0.30** MM (**0.0118** IN.)
Ω WITH CLEARANCE BETWEEN LEVER AND STOP SCREW **0.70** MM (**0.0276** IN.)
2–4 : **3.5**–**10.3** KΩ WITH THROTTLE VALVE FULYY OPEN
1–4 : **4.25**–**8.25** KΩ

(Z) EGR GAS TEMP. SENSOR
1–2 : **69.40**–**88.50** KΩ (**50**˚C, **122**˚F)
11.89–**14.37** KΩ (**100**˚C, **212**˚F)
2.79–**3.59** KΩ (**150**˚C, **302**˚F)

(c) OXYGEN SENSOR
1–2 : APPROX. **5.1**–**6.3** Ω

TCCS ECU (ELECTRONIC CONTROLLED UNIT)

VOLTAGE AT ECU WIRING CONNECTORS

(P) 2, 4, 12, 13–**(R)** 24 : **10**–**14** VOLTS (IGNITION SW ON)
(P) 1–**(R)** 24 : **10**–**14** VOLTS
(Q) 1–**(Q)** 9 : **4**–**6** VOLTS (IGNITION SW ON)
(Q) 12–**(Q)** 9 : **4**–**6** VOLTS (IGNITION SW ON AND THROTTLE VALVE OPEN)
(Q) 11–**(Q)** 9 : **0.1**–**1.0** VOLTS (IGNITION SW ON AND THROTTLE VALVE FULLY CLOSED)
4–**5** VOLTS (IGNITION SW ON AND THRTTLE VALVE FULLY OPEN)
(P) 11–**(R)** 24 : **6**–**14** VOLTS (CRANKING)
(R) 11, 12, 25–**(R)** 13, 26 : **9**–**14** VOLTS (IGNITION SW ON)
(P) 5–**(R)** 24 : **8**–**14** VOLTS (NO TROUBLE AND ENGINE RUNNING)
(R) 20–**(R)** 24 : **0.7**–**1.0** VOLTS (IGNITION SW ON)
(R) 4, 5, 6, 7–**(R)** 24 : **9**–**14** VOLTS (IGNITION SW ON)
(Q) 2–**(Q)** 9 : **4**–**5** VOLTS (IGNITION SW ON AND MEASURING PLATE FULLY CLOSED)
0.02–**0.08** VOLTS (IGNITION SW ON AND MEASURING PLATE FULLY OPEN)
2–**4** VOLTS (IDLING)
: **0.3**–**1.0** VOLTS (**3000** RPM)
(Q) 3–**(Q)** 9 : **1**–**3** VOLTS (IGNITION SW ON AND INTAKE AIR TEMP. **20**˚C, **68**˚F)
(Q) 4–**(Q)** 9 : **0.1**–**1.0** VOLTS (IGNITION SW ON AND COOLANT TEMP. **80**˚C, **176**˚F)
(P) 10–**(R)** 24 : **8**–**14** VOLTS (IGNITION SW ON AND A/C SWITCH ON)
(R) 22–**(R)** 24 : **4**–**6** VOLTS (IGNITION SW ON AND HEATER BLOWER SW ON)
(Q) 15–**(R)** 24 : **10**–**14** VOLTS (IGNITION SW ON AND CHECK CONNECTOR T–E1 NOT SHORT)
0 VOLTS (IGNITION SW ON AND CHECK CONNECTOR T–E1 SHORT)
(Q) 22–**(R)** 24 : **0** VOLTS (IGNITION SW ON AND SHIFT POSITION **P** OR **N** RANGE)
10–**14** VOLTS (IGNITION SW ON AND SHIFT POSITION EX. **P** OR **N** RANGE)
(Q) 13–**(R)** 24 : **10**–**14** VOLTS (STOP LIGHT SW ON)

RESISTANCE AT ECU WIRING COECTORS

(DISCONNECT WIRING CONNECTOR)

(Q) 12–**(Q)** 9 : Ω (THROTTLE VALVE FULLY OPEN)
0 OR **2300** Ω (THROTTLE VALVE FULLY CLOSED)
(Q) 11–**(Q)** 9 : **3.5**–**10.3** KΩ (THROTTLE VALVE FULLY OPEN)
0.3–**6.3** KΩ (THROTTLE VALVE FULLY CLOSED)
(Q) 1–**(Q)** 9 : **200**–**400** Ω
(Q) 3–**(Q)** 9 : **2**–**3** KΩ (INTAKE AIR TEMP. **20**˚C, **68**˚F)
(Q) 4–**(Q)** 9 : **0.2**–**0.4** KΩ (COOLANT TEMP. **80**˚C, **176**˚F)
(R) 2, 15–**(R)**14 : **140**–**180** KΩ
(R) 1–**(R)** 14 : **140**–**180** KΩ
(Q) 2–**(Q)** 9 : **200**–**600** KΩ (MEASURING PLATE FULLY CLOSED)
20–**1200** KΩ (MEASURING PLATE FULLY OPEN)
(R) 4, 5, 6, 7–**(P)** 12 : **10**–**30** Ω

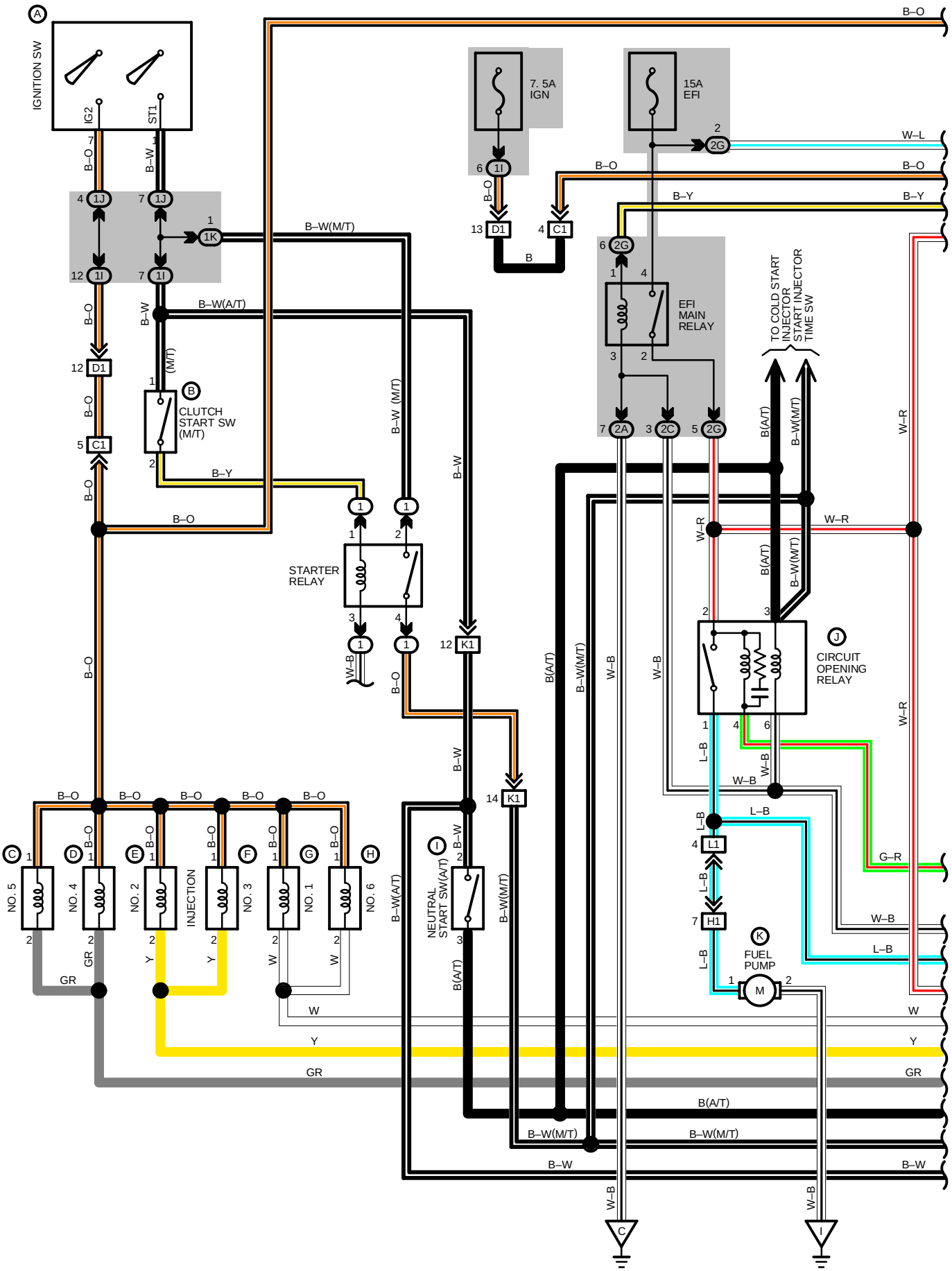
IGNITION SW
IG2
ST1
7. 5A
IGN
15A
EFI
EFI
MAIN
RELAY
CLUTCH
START SW
(M/T)
STARTER
RELAY
CIRCUIT
OPENING
RELAY
FUEL
PUMP
TO COLD START
INJECTOR
START INJECTOR
TIME SW
NEUTRAL
START SW(A/T)
INJECTION
NO. 5
NO. 4
NO. 2
NO. 3
NO. 1
NO. 6
B–O
B–W
B–W(M/T)
B–W(A/T)
B–Y
W–L
W–R
W–B
L–B
G–R
B(A/T)
B–W(M/T)
GR
W
Y

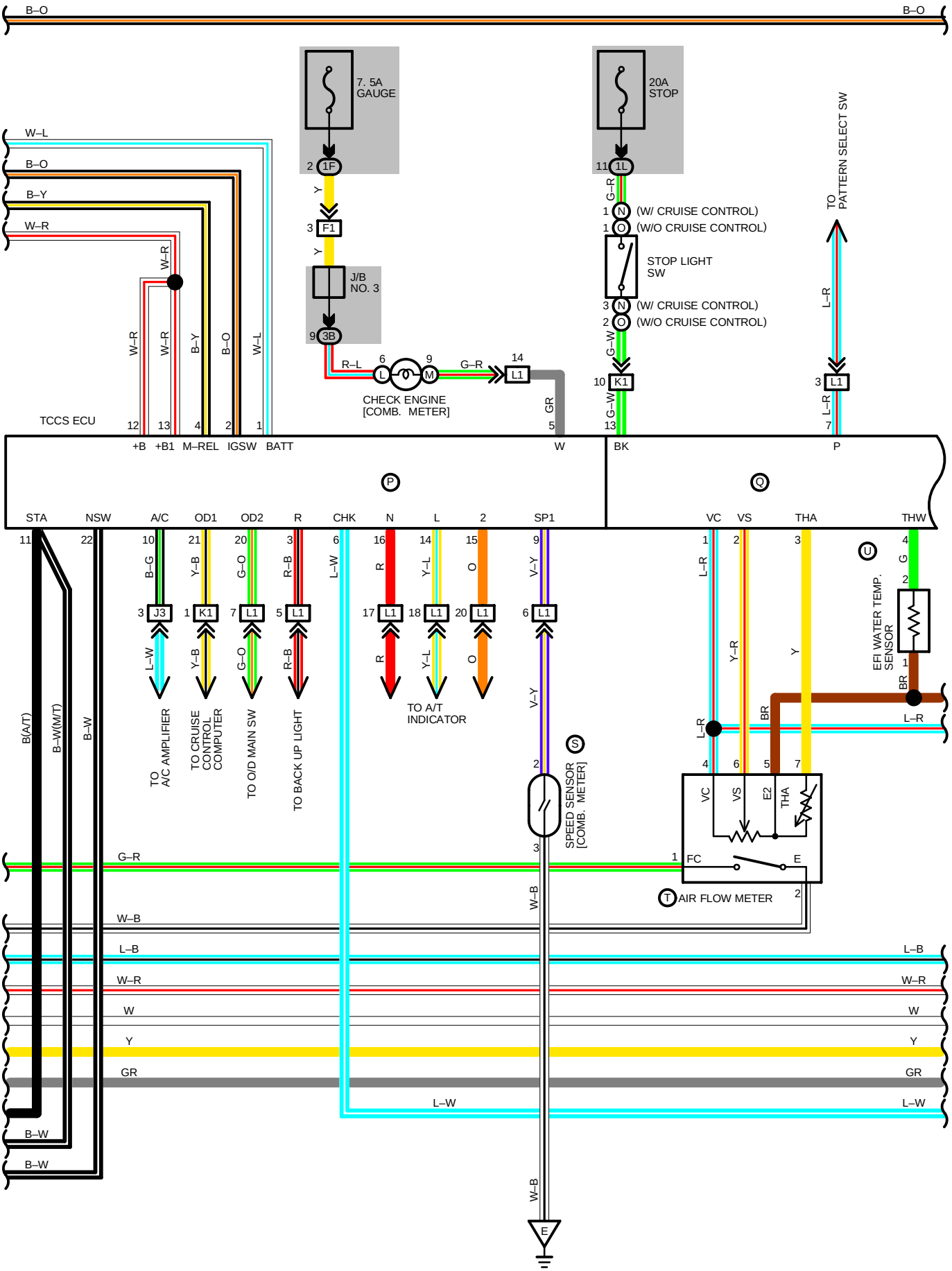
B–O
B–O
7. 5A GAUGE
20A STOP
2 1F
Y
3 F1
Y
J/B NO. 3
9 3B
R–L
6
9
G–R
14
L1
GR
5
W
CHECK ENGINE [COMB. METER]
11 1L
G–R
1 N (W/ CRUISE CONTROL)
1 O (W/O CRUISE CONTROL)
STOP LIGHT SW
3 N (W/ CRUISE CONTROL)
2 O (W/O CRUISE CONTROL)
G–W
10 K1
G–W
13
BK
TO PATTERN SELECT SW
L–R
3 L1
L–R
7
P
W–L
B–O
B–Y
W–R
W–R
W–R
W–R
B–Y
B–O
W–L
TCCS ECU
12 13 4 2 1
+B +B1 M–REL IGSW BATT
P
Q
STA 11
NSW 22
A/C 10 B–G 3 J3 L–W
OD1 21 Y–B 1 K1 Y–B
OD2 20 G–O 7 L1 G–O
R 3 R–B 5 L1 R–B
CHK 6 L–W
N 16 R 17 L1 R
L 14 Y–L 18 L1 Y–L
2 15 O 20 L1 O
SP1 9 V–Y 6 L1 V–Y
VC 1 L–R
VS 2 Y–R
THA 3 Y
THW 4 G 2 1 BR
U
EFI WATER TEMP. SENSOR
L–R
BR
L–R
4 6 5 7
VC VS E2 THA
FC 1
E 2
T AIR FLOW METER
TO A/C AMPLIFIER
TO CRUISE CONTROL COMPUTER
TO O/D MAIN SW
TO BACK UP LIGHT
TO A/T INDICATOR
S
2
SPEED SENSOR [COMB. METER]
3
V–Y
W–B
B(A/T)
B–W(M/T)
B–W
G–R
W–B
L–B
W–R
W
Y
GR
L–W
B–W
B–W
L–B
W–R
W
Y
GR
L–W
W–B
E

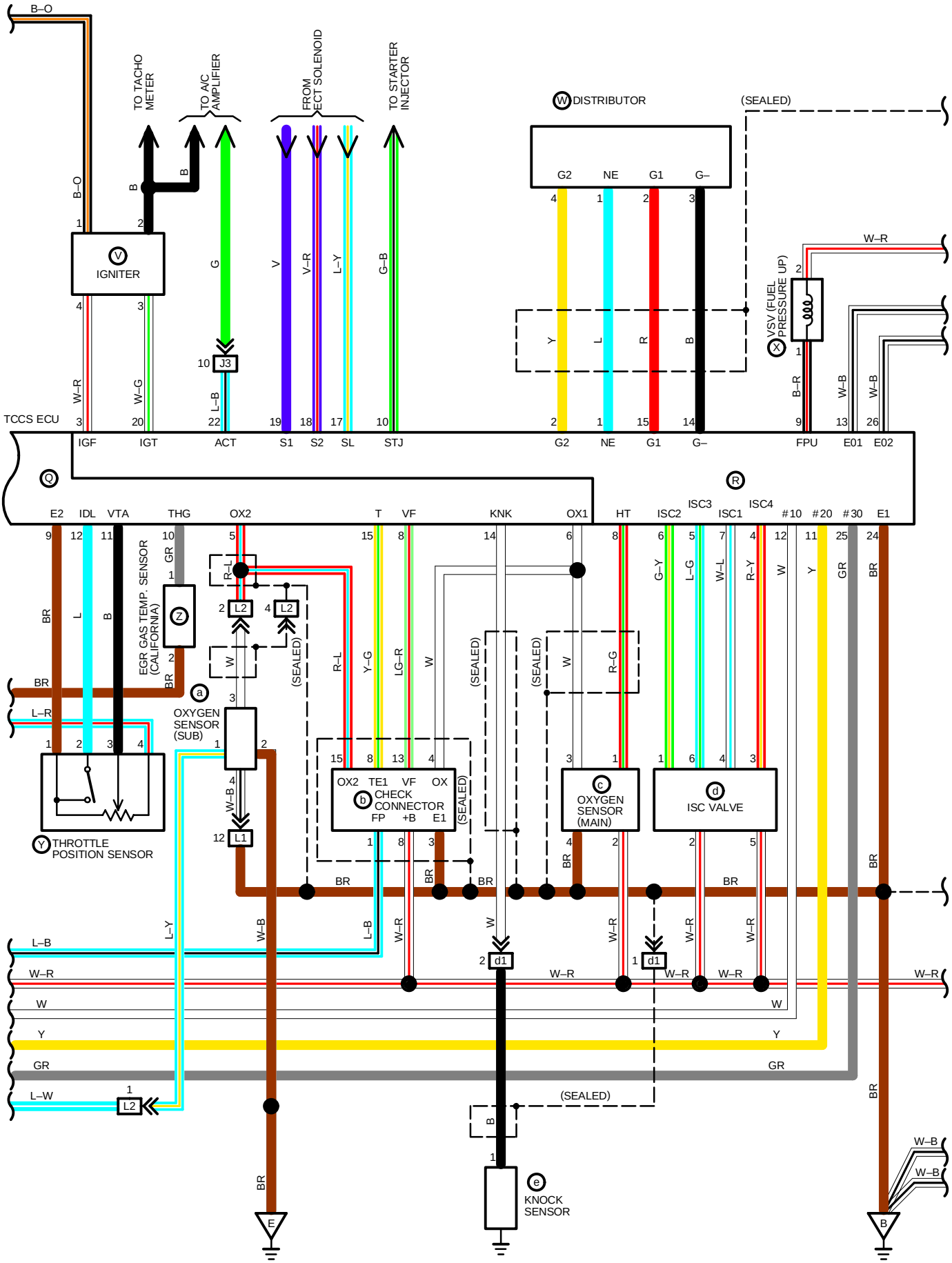
B–O
TO TACHO METER
TO A/C AMPLIFIER
FROM ECT SOLENOID
TO STARTER INJECTOR
W DISTRIBUTOR
(SEALED)
IGNITER
G2 NE G1 G–
W–R
VSV (FUEL PRESSURE UP)
TCCS ECU
IGF IGT ACT S1 S2 SL STJ
G2 NE G1 G– FPU E01 E02
E2 IDL VTA THG OX2 T VF KNK OX1 HT ISC2 ISC3 ISC1 ISC4 #10 #20 #30 E1
EGR GAS TEMP. SENSOR (CALIFORNIA)
OXYGEN SENSOR (SUB)
THROTTLE POSITION SENSOR
OX2 TE1 VF OX
CHECK CONNECTOR
FP +B E1
OXYGEN SENSOR (MAIN)
ISC VALVE
KNOCK SENSOR
(SEALED)
L–B
W–R
W
Y
GR
L–W
BR

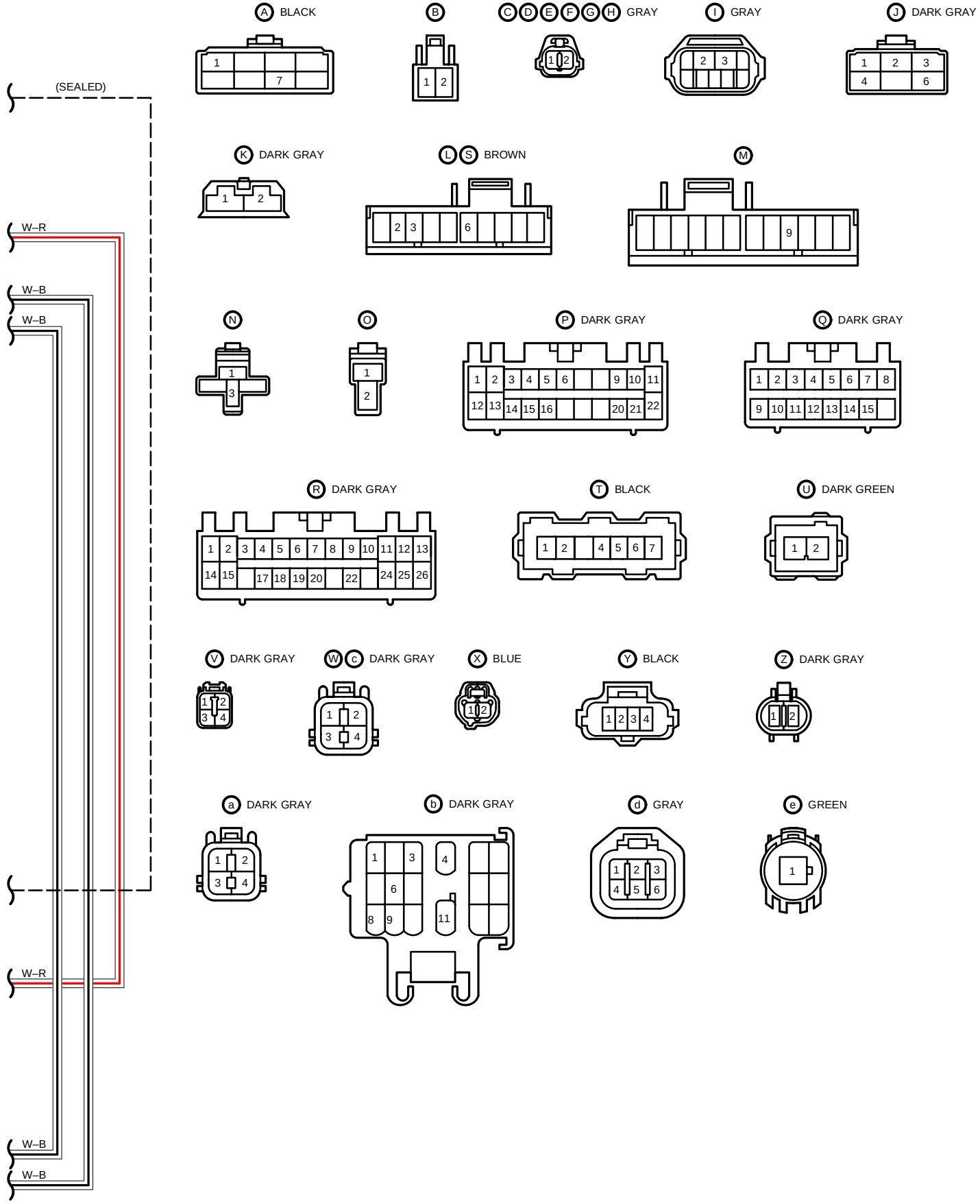
(SEALED)
W–R
W–B
W–B
W–R
W–B
W–B
A BLACK
B
C D E F G H GRAY
I GRAY
J DARK GRAY
K DARK GRAY
L S BROWN
M
N
O
P DARK GRAY
Q DARK GRAY
R DARK GRAY
T BLACK
U DARK GREEN
V DARK GRAY
W c DARK GRAY
X BLUE
Y BLACK
Z DARK GRAY
a DARK GRAY
b DARK GRAY
d GRAY
e GREEN

ENGINE CONTROL (2VZ–FE)

: PARTS LOCATION

CODE		SEE PAGE	CODE		SEE PAGE	CODE		SEE PAGE
A	I11	28	**L**	C13	28	**W**	D7	24
B	C10	28	**M**	C11	28	**X**	V3	24
C	I8	24	**N**	S9	28	**Y**	T1	24
D	I7	24	**O**	S9	28	**Z**	E3	24
E	I5	24	**P**	T2	28	**a**	O6	28
F	I6	24	**Q**	T3	28	**b**	C1	24
G	I4	24	**R**	T4	28	**c**	O3	24
H	I9	24	**S**	C13	28	**d**	I1	24
I	N1	24	**T**	A15	24	**e**	K2	24
J	C8	28	**U**	E2	24			
K	F7	26 (S/D), 27 (STATION W/G)	**V**	I3	24			

: RELAY BLOCKS

CODE	SEE PAGE	RELAY BLOCKS (RELAY BLOCK LOCATION)
1	23	R/B NO. 1 (LEFT KICK PANEL)

: JUNCTION BLOCK AND WIRE HARNESS CONNECTOR

CODE	SEE PAGE	JUNCTION BLOCK AND WIRE HARNESS (CONNECTOR LOCATION)
1F	18	COWL SUB WIRE AND J/B NO. 1 (LEFT KICK PANEL)
1I	18	COWL WIRE AND J/B NO. 1 (LEFT KICK PANEL)
1J		
1K		
1L		
2A	20	ENGINE ROOM MAIN WIRE AND J/B NO. 2 (ENGINE COMPARTMENT LEFT)
2C	20	ENGINE WIRE AND J/B NO. 2 (ENGINE COMPARTMENT LEFT)
2G		
3B	22	INSTRUMENT PANEL WIRE AND J/B NO. 3 (INSTRUMENT PANEL LEFT)

: CONNECTOR JOINING WIRE HARNESS AND WIRE HARNESS

CODE	SEE PAGE	JOINING WIRE HARNESS AND WIRE HARNESS (CONNECTOR LOCATION)
C1	30	ENGINE ROOM MAIN WIRE AND ENGINE WIRE (NEAR J/B NO. 2)
D1	30	ENGINE ROOM WIRE AND COWL WIRE (LEFT KICK PANEL)
F1	34	INSTRUMENT PANEL WIRE AND COWL SUB WIRE (LEFT KICK PANEL)
H1	34	FLOOR NO. 1 WIRE AND INSTRUMENT PANEL WIRE (LEFT KICK PANEL)
J3	34	ENGINE WIRE AND A/C WIRE (BEHIND GLOVE BOX)
K1	34	ENGINE WIRE AND COWL WIRE (BEHIND GLOVE BOX)
L1	34	ENGINE WIRE AND INSTRUMENT PANEL WIRE (BEHIND GLOVE BOX)
L2		
d1	30	SENSOR WIRE AND ENGINE WIRE (ABOVE THE ENGINE HEAD COVER)

: GROUND POINTS

CODE	SEE PAGE	GROUND POINTS LOCATION
B	30	INTAKE MANIFOLD
C	30	RADIATOR LEFT
E	34	LEFT KICK PANEL
I	36 (S/D)	LEFT REAR FENDER
	38 (STATION W/G)	

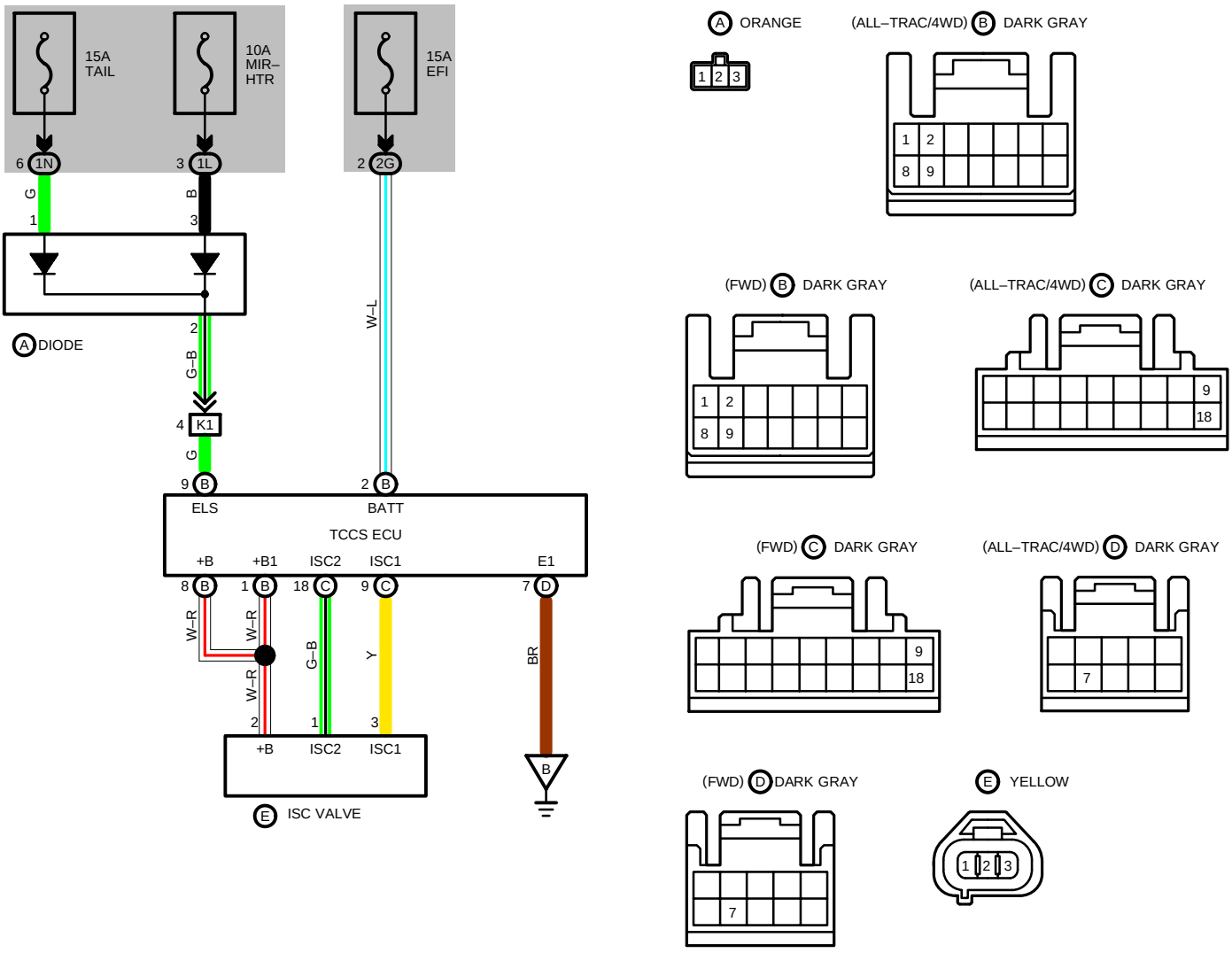

SERVICE HINTS

(A) DIODE (ELECTRICAL IDLE–UP)

1–GROUND : APPROX **12** VOLTS WITH LIGHT CONTROL SW AT **TAIL** OR **HEAD** POSITION

: PARTS LOCATION

CODE		SEE PAGE	CODE		SEE PAGE	CODE		SEE PAGE
A	D10	28	**C**	T3	28	**E**	I1	25
B	T2	28	**D**	T4	28			

: JUNCTION BLOCK AND WIRE HARNESS CONNECTOR

CODE	SEE PAGE	JUNCTION BLOCK AND WIRE HARNESS (CONNECTOR LOCATION)
1L	18	COWL WIRE AND J/B NO. 1 (LEFT KICK PANEL)
1N		
2G	20	ENGINE WIRE AND J/B NO. 2 (ENGINE COMPARTMENT LEFT)

: CONNECTOR JOINING WIRE HARNESS AND WIRE HARNESS

CODE	SEE PAGE	JOINING WIRE HARNESS AND WIRE HARNESS (CONNECTOR LOCATION)
K1	34	ENGINE WIRE AND COWL WIRE (BEHIND GLOVE BOX)

: GROUND POINTS

CODE	SEE PAGE	GROUND POINTS LOCATION
B	32	INTAKE MANIFOLD

LIGHT AUTO TURN OFF

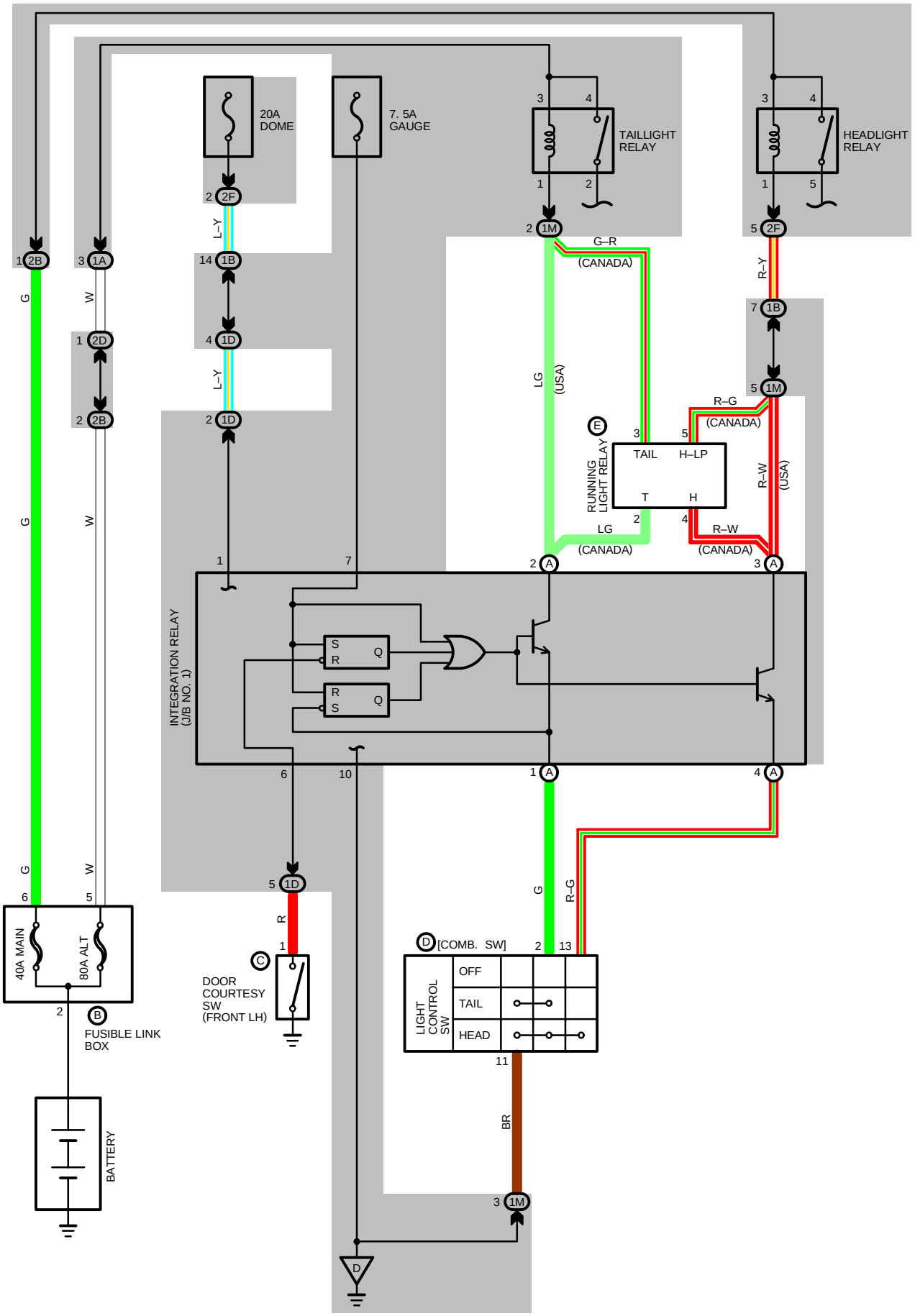

SYSTEM OUTLINE

WITH THE IGNITION SW TURNED ON, THE CURRENT FLOWS TO TERMINAL 7 OF THE INTEGRATION RELAY THROUGH GAUGE FUSE.

VOLTAGE IS APPLIED AT ALL TIMES TO TERMINAL A 2 OF THE INTEGRATION RELAY THROUGH THE TAILLIGHT RELAY COIL, AND TO TERMINAL A 3 THROUGH THE HEADLIGHT RELAY COIL.

1. NORMAL LIGHTING OPERATION

<TURN TAILLIGHT ON>

WITH LIGHT CONTROL SW TURNED TO TAILLIGHT POSITION, A SIGNAL IS INPUT INTO TERMINAL A 1 OF THE INTEGRATION RELAY. ACCORDING TO THIS SIGNAL, THE CURRENT FLOWING TO TERMINAL A 2 OF THE RELAY FLOWS FROM TERMINAL A 1 → TERMINAL 2 OF THE LIGHT CONTROL SW → TERMINAL 11 → TO GROUND AND TAILLIGHT RELAY CAUSES TAILLIGHT TO TURN ON.

<TURN HEADLIGHT ON>

WITH LIGHT CONTROL SW TURNED TO HEADLIGHT POSITION, A SIGNAL IS INPUT INTO TERMINALS A 1 AND A 4 OF THE INTEGRATION RELAY. ACCORDING TO THIS SIGNAL, THE CURRENT FLOWING TO TERMINAL A 3 OF THE RELAY FLOWS TO TERMINAL A 4 → TERMINAL 13 OF THE LIGHT CONTROL SW → TERMINAL 11 → TO GROUND IN THE HEADLIGHT CIRCUIT, AND CAUSES TAILLIGHT AND HEADLIGHT RELAY TO TURN THE LIGHT ON. THE TAILLIGHT CIRCUIT IS SAME AS ABOVE.

2. LIGHT AUTO TURN OFF OPERATION

WITH LIGHTS ON AND IGNITION SW TURNED OFF (INPUT SIGNAL GOES TO TERMINAL 7 OF THE RELAY), WHEN DOOR ON DRIVER'S SIDE IS OPENED (INPUT SIGNAL GOES TO TERMINAL 6 OF THE RELAY), THE RELAY OPERATES AND THE CURRENT IS CUT OFF WHICH FLOWS FROM TERMINAL A 2 OF THE RELAY TO TERMINAL A 1 IN TAILLIGHT CIRCUIT AND FROM TERMINAL A 3 TO TERMINAL A 4 IN HEADLIGHT CIRCUIT. AS A RESULT, ALL LIGHTS ARE TURNED OFF AUTOMATICALLY.

SERVICE HINTS

INTEGRATION RELAY

7–GROUND : APPROX. **12** VOLTS WITH IGNITION SW AT **ON** POSITION
1–GROUND : ALWAYS APPROX. **12** VOLTS
6–GROUND : CONTINUITY WITH DRIVER'S DOOR OPEN
10–GROUND : ALWAYS CONTINUITY
(A) 3–GROUND : APPROX. **12** VOLTS WITH LIGHT CONTROL SW AT **OFF** OR **TAIL** POSITION
(A) 2–GROUND : APPROX. **12** VOLTS WITH LIGHT CONTROL SW AT **OFF** POSITION
(A) 4–GROUND : CONTINUITY WITH LIGHT CONTROL SW AT **HEAD** POSITION
(A) 1–GROUND : CONTINUITY WITH LIGHT CONTROL SW AT **TAIL** OR **HEAD** POSITION

○ : PARTS LOCATION

CODE		SEE PAGE	CODE		SEE PAGE	CODE		SEE PAGE
A	I12	28	**C**	D19	26 (S/D), 27 (STATION W/G)	**E**	R2	28 (CANADA)
B	F6	24 (2VZ–FE), 25 (3S–FE)	**D**	C14	28			

⬭ : JUNCTION BLOCK AND WIRE HARNESS CONNECTOR

CODE	SEE PAGE	JUNCTION BLOCK AND WIRE HARNESS (CONNECTOR LOCATION)
1A	18	ENGINE ROOM MAIN WIRE AND J/B NO. 1 (LEFT KICK PANEL)
1B		
1D	18	FLOOR WIRE AND J/B NO. 1 (LEFT KICK PANEL)
1M	18	COWL WIRE AND J/B NO. 1 (LEFT KICK PANEL)
2B	20	ENGINE WIRE AND J/B NO. 2 (ENGINE COMPARTMENT LEFT)
2D	20	ENGINE ROOM MAIN WIRE AND J/B NO. 2 (ENGINE COMPARTMENT LEFT)
2F		

▽ : GROUND POINTS

CODE	SEE PAGE	GROUND POINTS LOCATION
D	34	J/B NO. 1 SET BOLT

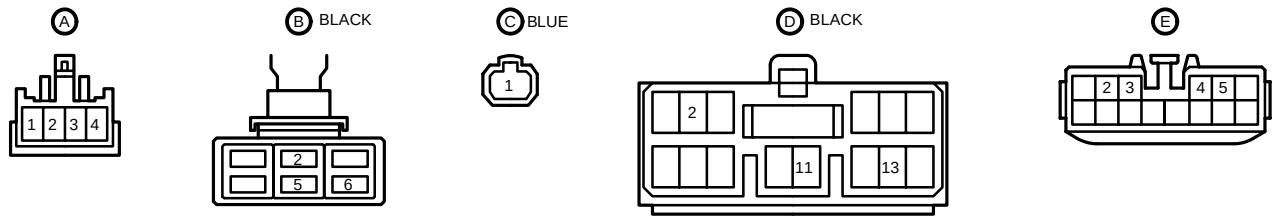

HEADLIGHTS (USA)

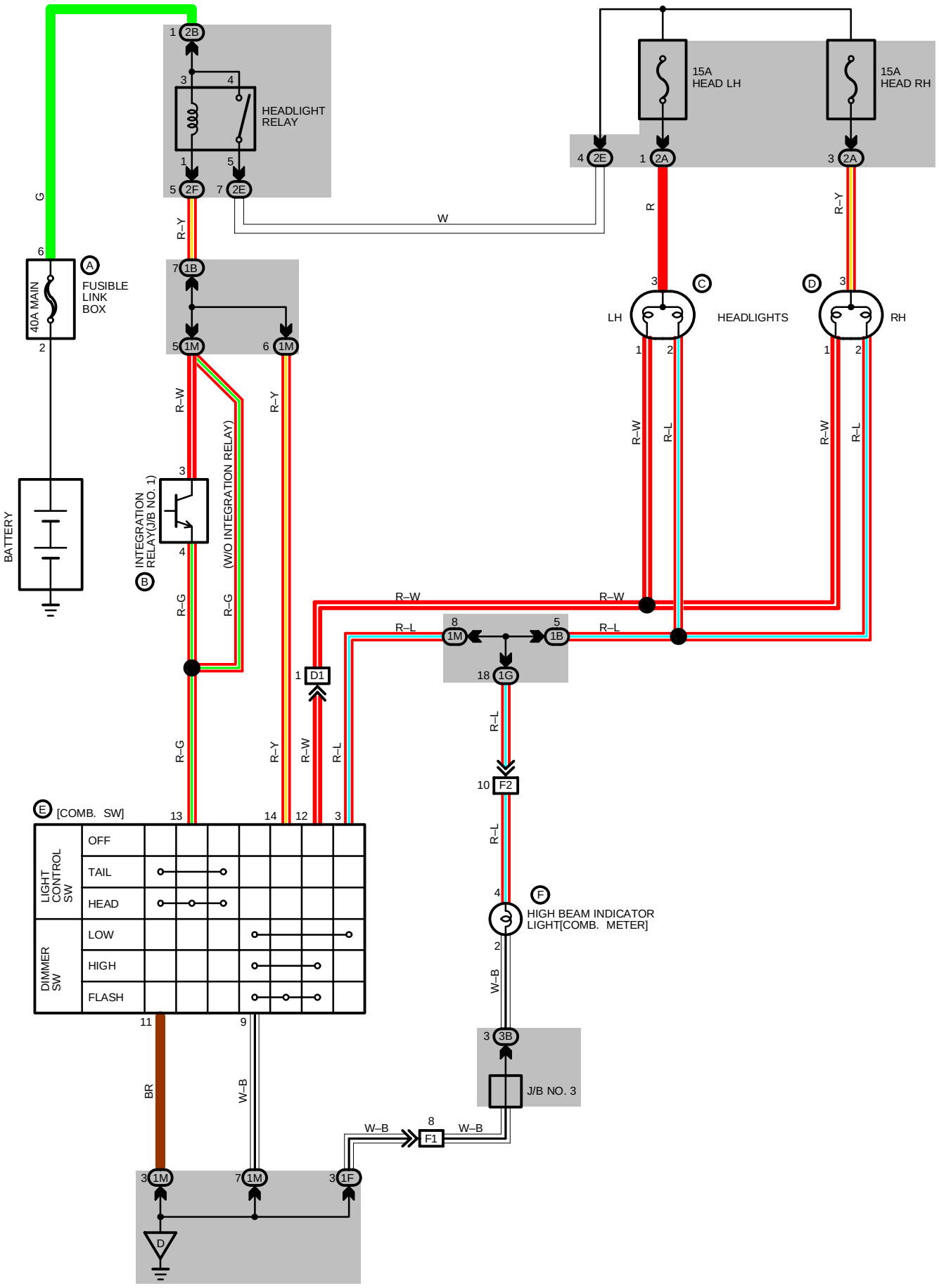

SERVICE HINTS

HEADLIGHT RELAY

4–5 : CLOSED WITH LIGHT CONTROL SW AT **HEAD** POSITION OR DIMMER SW AT **FLASH** POSITION

LIGHT AUTO TURN OFF OPERATION

PLEASE REFER TO THE LIGHT AUTO TURN OFF SYSTEM (SEE PAGE 69)

: PARTS LOCATION

CODE		SEE PAGE	CODE		SEE PAGE	CODE		SEE PAGE
A	F6	24 (2VZ–FE), 25 (3S–FE)	**C**	H1	24 (2VZ–FE), 25 (3S–FE)	**E**	C14	28
B	I12	28	**D**	H2	24 (2VZ–FE), 25 (3S–FE)	**F**	C12	28

: JUNCTION BLOCK AND WIRE HARNESS CONNECTOR

CODE	SEE PAGE	JUNCTION BLOCK AND WIRE HARNESS (CONNECTOR LOCATION)
1B	18	ENGINE ROOM MAIN WIRE AND J/B NO. 1 (LEFT KICK PANEL)
1F	18	COWL SUB WIRE AND J/B NO. 1 (LEFT KICK PANEL)
1G		
1M	18	COWL WIRE AND J/B NO. 1 (LEFT KICK PANEL)
2A	20	ENGINE ROOM MAIN WIRE AND J/B NO. 2 (ENGINE COMPARTMENT LEFT)
2B	20	ENGINE WIRE AND J/B NO. 2 (ENGINE COMPARTMENT LEFT)
2E	20	ENGINE ROOM NO. 4 WIRE AND J/B NO. 2 (ENGINE CMPARTMENT LEFT)
2F	20	ENGINE ROOM MAIN WIRE AND J/B NO. 2 (ENGINE COMPARTMENT LEFT)
3B	22	INSTRUMENT PANEL WIRE AND J/B NO. 3 (INSTRUMENT PANEL LEFT)

: CONNECTOR JOINING WIRE HARNESS AND WIRE HARNESS

CODE	SEE PAGE	JOINING WIRE HARNESS AND WIRE HARNESS (CONNECTOR LOCATION)
D1	30 (2VZ–FE) 32 (3S–FE)	FLOOR WIRE AND J/B NO. 1 (LEFT KICK PANEL)
F1	34	INSTRUMENT PANEL WIRE AND COWL SUB WIRE (LEFT KICK PANEL)
F2		

: GROUND POINTS

CODE	SEE PAGE	GROUND POINTS LOCATION
D	34	J/B NO. 1 SET BOLT

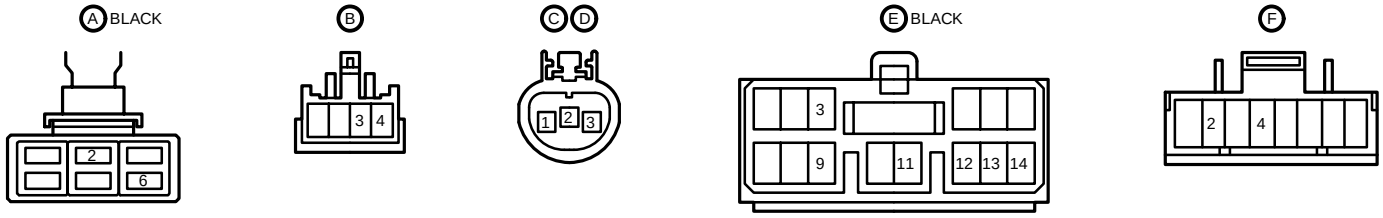

HEADLIGHTS (CANADA)

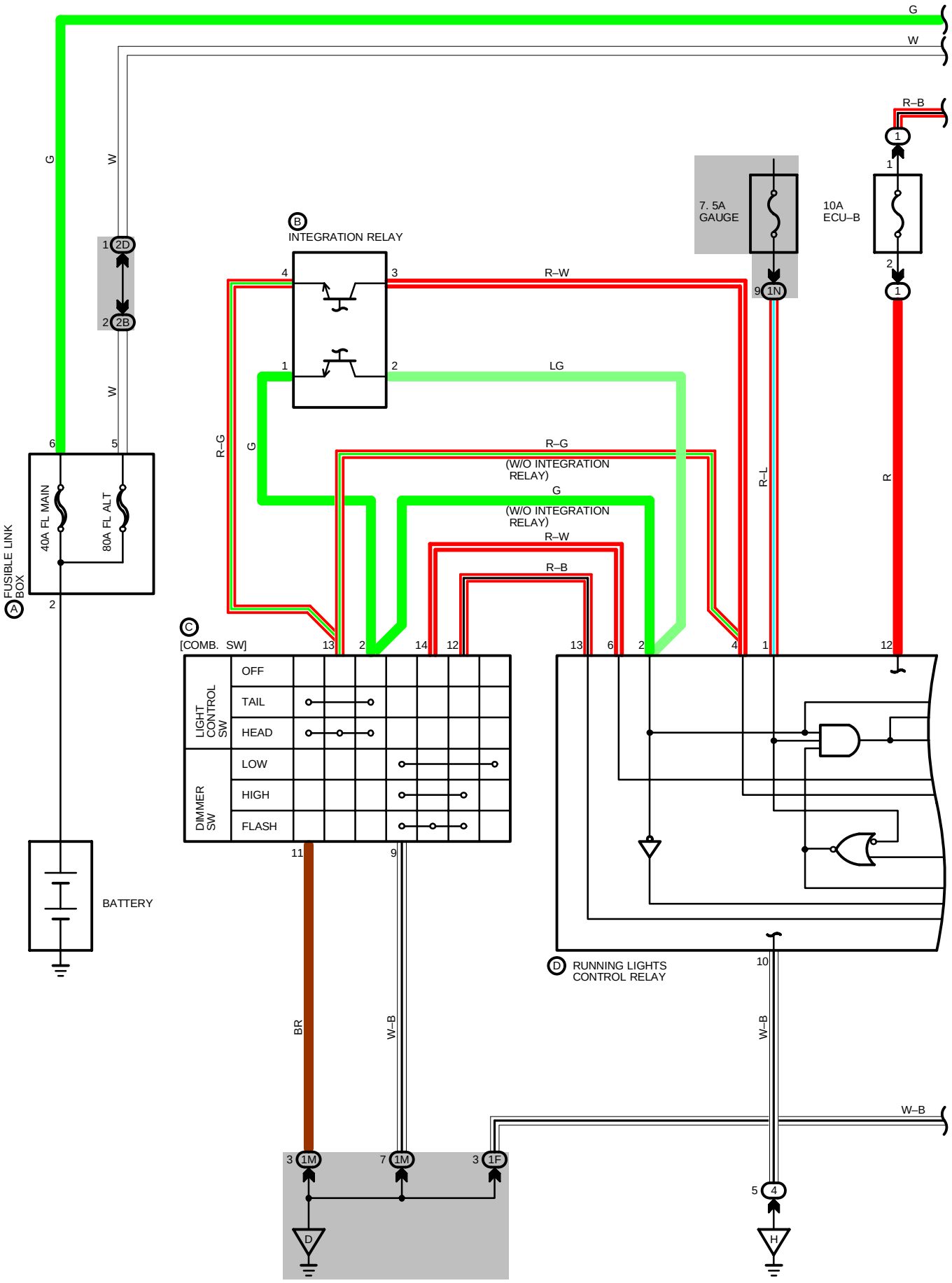

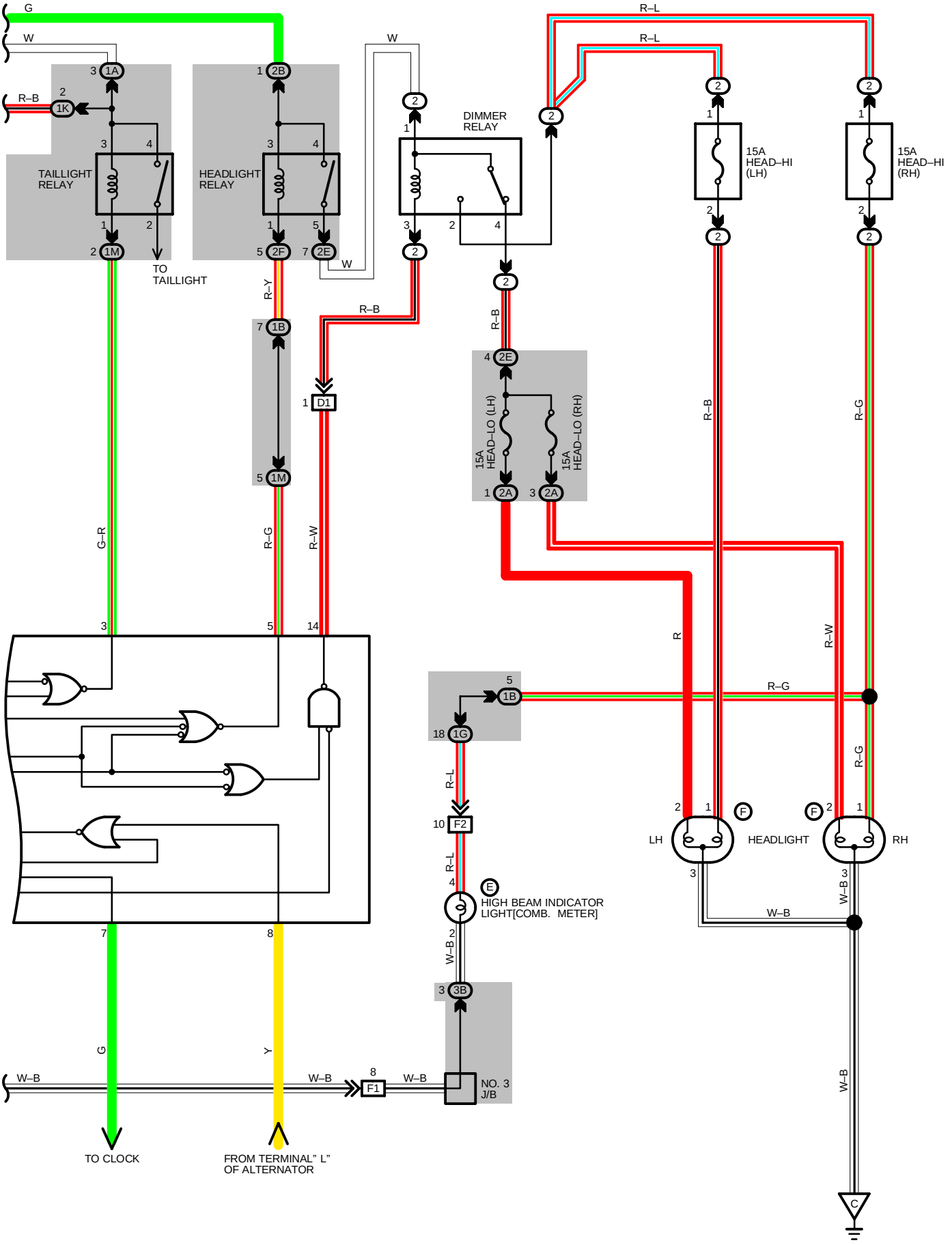

G
W
R–B
1A
1K
TAILLIGHT RELAY
1M
TO TAILLIGHT
2B
HEADLIGHT RELAY
2F
2E
R–Y
1B
1M
G–R
R–G
R–W
D1
DIMMER RELAY
R–L
15A HEAD–HI (LH)
15A HEAD–HI (RH)
15A HEAD–LO (LH)
15A HEAD–LO (RH)
2A
R
R–G
1G
F2
HIGH BEAM INDICATOR LIGHT[COMB. METER]
W–B
3B
F1
NO. 3 J/B
LH
HEADLIGHT
RH
C
TO CLOCK
FROM TERMINAL" L" OF ALTERNATOR

HEADLIGHTS (CANADA)

SYSTEM OUTLINE

CURRENT FROM THE BATTERY IS ALWAYS FLOWING FROM FL ALT → TAILLIGHT RELAY (COIL SIDE) → TERMINAL 3 OF RUNNING LIGHT CONTROL RELAY, FL MAIN → HEADLIGHT RELAY (COIL SIDE) → TERMINAL 5 OF RUNNING LIGHT CONTROL RELAY, AND FL ALT → ECU–B FUSE → TERMINAL 12 OF RUNNING LIGHT CONTROL RELAY.

WHEN THE IGNITION SW IS TURNED ON, THE CURRENT FLOWING THROUGH THE GAUGE FUSE FLOWS TO TERMINAL 1 OF THE RUNNING LIGHT CONTROL RELAY.

1. DAYTIME RUNNING LIGHT OPERATION

WHEN THE ENGINE IS STARTED, VOLTAGE IS PRODUCED AT TERMINAL L OF THE ALTERNATOR AND WHEN VOLTAGE IS APPLIED TO TERMINAL 8 OF THE RUNNING LIGHT CONTROL RELAY, THE RUNNING LIGHT CONTROL RELAY OPERATES AND CURRENT FLOWS FROM THE TAILLIGHT RELAY (POINT SIDE) → TAIL FUSE → TAIL, LICENSE, SIDE MARKER AND FRONT CLEARANCE LIGHTS → GROUND, AND FROM HEADLIGHT RELAY (POINT SIDE) → TERMINAL 1 OF DIMMER RELAY → TERMINAL 4 HEAD FUSES (LOW SIDE) → HEADLIGHTS → GROUND.

ACCORDINGLY, EVEN IF THE LIGHT CONTROL SW IS IN OFF POSITION, EACH LIGHT MENTIONED HERE LIGHTS UP. THIS SYSTEM OPERATES UNTIL THE IGNITION SW IS TURNED OFF.

2. TAILLIGHT OPERATION

WHEN THE LIGHT CONTROL SW IS TURNED TO THE TAILLIGHT POSITION, CURRENT FLOWING TO THE TAILLIGHT RELAY (COIL SIDE) ALWAYS FLOWS TO TERMINAL 3 OF RUNNING LIGHT CONTROL RELAY → TERMINAL 2 → TERMINAL 2 OF INTEGRATION RELAY → TERMINAL 1 → TERMINAL 2 OF LIGHT CONTROL SW (COMB. SW) → TERMINAL 11 → GROUND, TURNING THE TAILLIGHT RELAY ON.

THIS CAUSES THE CURRENT FLOWING TO THE TAILLIGHT RELAY (POINT SIDE) TO FLOW FROM THE TAILLIGHT RELAY → TAIL FUSE → TAIL, LICENSE, SIDE MARKER AND FRONT CLEARANCE LIGHTS → GROUND, CAUSING THE TAILLIGHTS TO LIGHT UP.

AT THIS TIME, THE CURRENT FLOWING TO THE ECU–B FUSE FLOWS FROM TERMINAL 12 OF THE RUNNING LIGHT CONTROL RELAY TO TERMINAL 7, PROVIDING POWER FOR ILLUMINATION OF THE CLOCK.

3. HEADLIGHT OPERATION

WHEN THE LIGHT CONTROL SW IS TURNED TO HEADLIGHT POSITION AND THE DIMMER SW TO LOW SIDE, THE CURRENT FLOWING TO THE HEADLIGHT RELAY (COIL SIDE) FLOWS TO TERMINAL 5 OF THE RUNNING LIGHT CONTROL RELAY → TERMINAL 4 → TERMINAL 3 OF INTEGRATION RELAY → TERMINAL 4 → TERMINAL 13 OF LIGHT CONTROL SW (COMB. SW) → TERMINAL 11 → GROUND, TURNING THE HEADLIGHT RELAY ON.

THIS CAUSES THE CURRENT FLOWING TO THE HEADLIGHT RELAY (POINT SIDE) TO FLOW FROM THE HEADLIGHT RELAY → TERMINAL 1 OF DIMMER RELAY TERMINAL 4 → HEAD LH (LO), RH (LO) FUSE → HEADLIGHTS (LOW) → GROUND, SO THE HEADLIGHTS (LOW) LIGHT UP.

WHEN THE DIMMER SW IS SWITCHED TO THE HIGH SIDE, CURRENT FLOWS FROM TERMINAL 1 OF DIMMER RELAY → TERMINAL 3 → TERMINAL 14 OF RUNNING LIGHT CONTROL RELAY → TERMINAL 13 → TERMINAL 12 OF DIMMER SW → TERMINAL 9 → GROUND, TURNING THE DIMMER RELAY ON.

THIS CAUSES THE CURRENT FLOWING TO TERMINAL 1 OF THE DIMMER RELAY TO FLOW FROM TERMINAL 2 OF DIMMER RELAY → HEAD LH (HI), RH (HI) HEADLIGHTS (HIGH) → GROUND, CAUSING THE HEADLIGHTS (HIGH) TO LIGHT UP.

WHEN THE DIMMER SW IS TURNED TO FLASH POSITION, CURRENT FLOWS FROM TERMINAL 5 AND 14 OF THE RUNNING LIGHT CONTROL RELAY → TERMINAL 6 → TERMINAL 14 OF DIMMER SW (COMB. SW) → TERMINAL 9 → GROUND, SO THAT THE HEADLIGHT RELAY AND DIMMER RELAY ARE ACTIVATED IN THAT ORDER AND THE HEADLIGHTS CHANGE TO FLASHING MODE.

WHEN THE HEADLIGHTS ARE LIGHTED UP (WITH THE EXCEPTION OF FLASHING MODE), THE TAILLIGHTS ARE LIGHTED UP AS DESCRIBED IN PART 2 EARLIER.

SERVICE HINTS

TAILLIGHT RELAY

2–4 : CLOSED WITH LIGHT CONTROL SW AT **TAIL** OR **HEAD** POSITION
CLOSED WITH ENGINE RUNNING

HEADLIGHT RELAY

4–5 : CLOSED WITH LIGHT CONTROL SW AT **HEAD** POSITION OR DIMMER SW AT **FLASH** POSITION
CLOSED WITH ENGINE RUNNING

DIMMER RELAY

CHANGED FROM **HEAD (LO)** TO **HEAD (HI)** WITH DIMMER SW AT **FLASH** POSITION OR WITH HEADLIGHT RELAY **ON** AND DIMMER SW AT **HIGH** POSITION

: PARTS LOCATION

CODE		SEE PAGE	CODE		SEE PAGE	CODE		SEE PAGE
A	F6	24 (2VZ–FE), 25 (3S–FE)	**D**	R23	28	**F**	H2	24 (2VZ–FE), 25 (3S–FE)
B	I12	28	**E**	C12	28			
C	C14	28	**F**	H1	24 (2VZ–FE), 25 (3S–FE)			

: RELAY BLOCKS

CODE	SEE PAGE	RELAY BLOCKS (RELAY BLOCK LOCATION)
1	23	R/B NO. 1 (LEFT KICK PANEL)
2	20	R/B NO. 2 (ENGINE COMPARTMENT LEFT)
4	23	R/B NO. 4 (RIGHT KICK PANEL)

: JUNCTION BLOCK AND WIRE HARNESS CONNECTOR

CODE	SEE PAGE	JUNCTION BLOCK AND WIRE HARNESS (CONNECTOR LOCATION)
1A	18	ENGINE ROOM MAIN WIRE AND J/B NO. 1 (LEFT KICK PANEL)
1B		
1F	18	COWL SUB WIRE AND J/B NO. 1 (LEFT KICK PANEL)
1G		
1K	18	COWL WIRE AND J/B NO. 1 (LEFT KICK PANEL)
1M		
1N		
2A	20	ENGINE ROOM MAIN WIRE AND J/B NO. 2 (ENGINE COMPARTMENT LEFT)
2B	20	ENGINE WIRE AND J/B NO. 2 (ENGINE COMPARTMENT LEFT)
2D	20	ENGINE ROOM MAIN WIRE AND J/B NO. 2 (ENGINE COMPARTMENT LEFT)
2E	20	ENGINE ROOM NO. 4 WIRE AND J/B NO. 2 (ENGINE COMPARTMENT LEFT)
2F	20	ENGINE ROOM MAIN WIRE AND J/B NO. 2 (ENGINE COMPARTMENT LEFT)
3B	22	INSTRUMENT PANEL WIRE AND J/B NO. 3 (INSTRUMENT PANEL LEFT)

: CONNECTOR JOINING WIRE HARNESS AND WIRE HARNESS

CODE	SEE PAGE	JOINING WIRE HARNESS AND WIRE HARNESS (CONNECTOR LOCATION)
D1	30 (2VZ–FE)	ENGINE ROOM WIRE AND COWL WIRE (LEFT KICK PANEL)
	32 (3S–FE)	
F1	34	INSTRUMENT PANEL WIRE AND COWL SUB WIRE (LEFT KICK PANEL)
F2		

: GROUND POINTS

CODE	SEE PAGE	GROUND POINTS LOCATION
C	30 (2VZ–FE)	RADIATOR LEFT
	32 (3S–FE)	
D	34	J/B NO. 1 SET BOLT
H	34	R/B NO. 4 SET BOLT

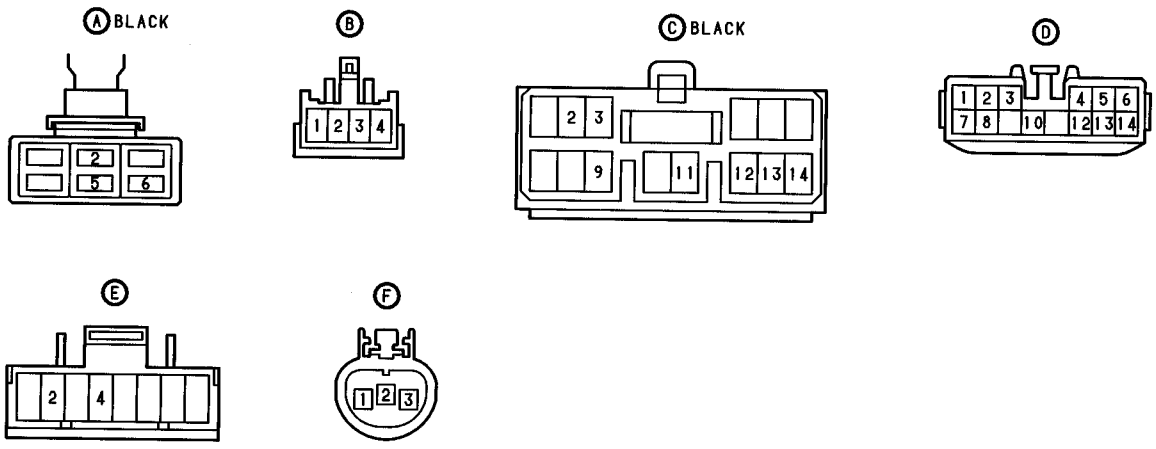

INTERIOR LIGHTS (w/ DOOR LOCK)

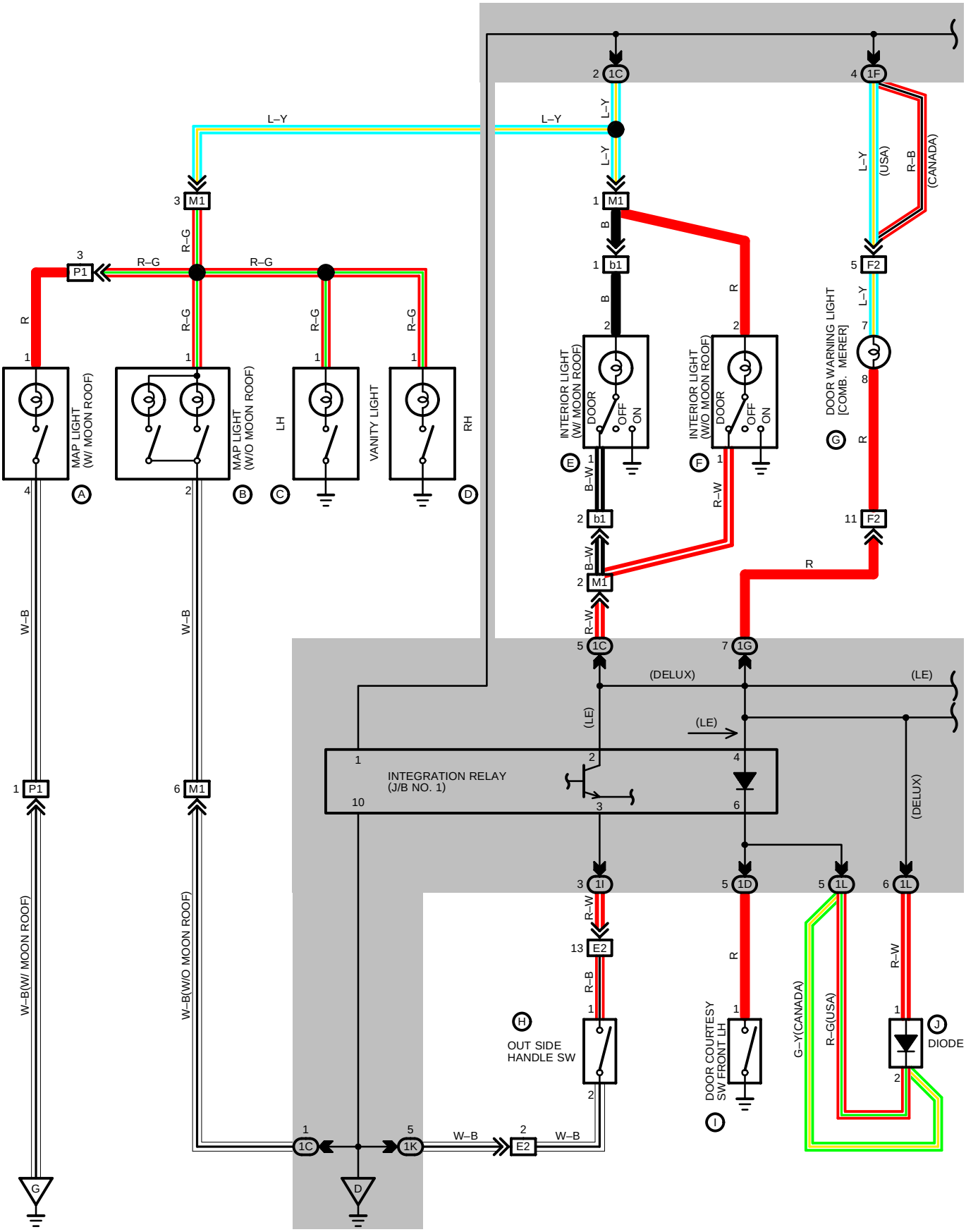

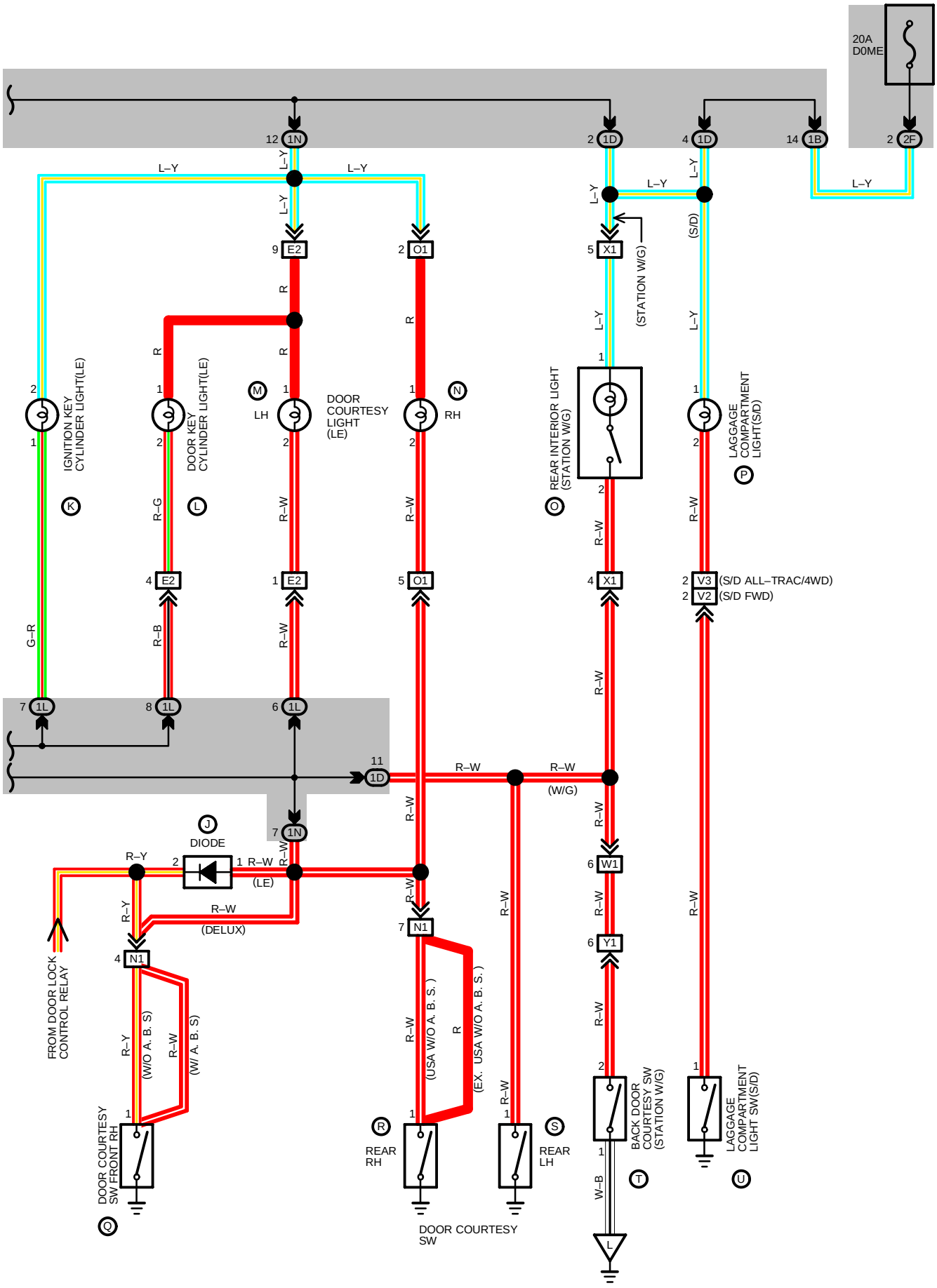
20A
D0ME
IGNITION KEY
CYLINDER LIGHT(LE)
DOOR KEY
CYLINDER LIGHT(LE)
DOOR
COURTESY
LIGHT
(LE)
LH
RH
REAR INTERIOR LIGHT
(STATION W/G)
LAGGAGE
COMPARTMENT
LIGHT(S/D)
(STATION W/G)
(S/D)
(S/D ALL–TRAC/4WD)
(S/D FWD)
DIODE
(LE)
(DELUX)
(W/G)
FROM DOOR LOCK
CONTROL RELAY
(W/O A. B. S)
(W/ A. B. S)
(USA W/O A. B. S.)
(EX. USA W/O A. B. S.)
DOOR COURTESY
SW FRONT RH
REAR
RH
REAR
LH
DOOR COURTESY
SW
BACK DOOR
COURTESY SW
(STATION W/G)
LAGGAGE
COMPARTMENT
LIGHT SW(S/D)

INTERIOR LIGHTS (w/ DOOR LOCK)

SERVICE HINTS

INTEGRATION RELAY NO. 1 (J/B NO. 1)

(1G) 7–GROUND : APPROX. **12** VOLTS WITH DOOR CLOSED
0 VOLT WITH ANY DOOR OPEN

20A DOME FUSE : ALWAYS **12** VOLTS

(1I) 3–GROUND : APPROX. **12** VOLTS WITH DRIVER'S DOOR OUTSIDE HANDLE HOLD UP

(1L) 7–GROUND : APPROX. **12** VOLTS WITH DOOR CLOSED
0 VOLT WITH ANY DOOR OPEN
0 VOLT → **12** VOLTS WITHIN **8.5** SECONDS AFTER DOOR CLOSED OR AFTER DRIVER'S DOOR OUTSIDE HANDEL HOLD UP

(H) OUTSIDE HANDLE SW (DRIVER'S DOOR)
1–3 : CLOSED WITH DRIVER'S DOOR OUTSIDE HANL HOLD UP

(I) (Q) (R) (S) DOOR COURTESY SW
1–GROUND : CLOSED WITH DOOR OPEN

(T) BACK DOOR COURTESY SW (W/G)
2–GROUND : CLOSED WITH BACK DOOR OPEN

(U) LUGGAGE COMPARTMENT LIGHT SW
1–GROUND : CLOSED WITH LUGGAGE COMPARTMENT DOOR OPEN

: PARTS LOCATION

CODE		SEE PAGE	CODE		SEE PAGE	CODE		SEE PAGE
A	M5	26 (S/D), 27 (STATION W/G)	**I**	D17	26 (S/D), 27 (STATION W/G)	**Q**	D18	26 (S/D), 27 (STATION W/G)
B	M1	26 (S/D), 27 (STATION W/G)	**J**	D12	28	**Q**	D19	26 (S/D), 27 (STATION W/G)
C	V1	26 (S/D), 27 (STATION W/G)	**K**	I10	28	**R**	D21	26 (S/D), 27 (STATION W/G)
D	V2	26 (S/D), 27 (STATION W/G)	**L**	D23	26 (S/D), 27 (STATION W/G)	**R**	D22	26 (S/D), 27 (STATION W/G)
E	I13	26 (S/D), 27 (STATION W/G)	**M**	D15	26 (S/D), 27 (STATION W/G)	**S**	D20	26 (S/D), 27 (STATION W/G)
F	I13	26 (S/D), 27 (STATION W/G)	**N**	D16	26 (S/D), 27 (STATION W/G)	**T**	B8	27
G	C11	28	**O**	R15	27	**U**	L5	26
H	D23	26 (S/D), 27 (STATION W/G)	**P**	L4	26			

: JUNCTION BLOCK AND WIRE HARNESS CONNECTOR

CODE	SEE PAGE	JUNCTION BLOCK AND WIRE HARNESS (CONNECTOR LOCATION)
1B	18	ENGINE ROOM MAIN WIRE AND J/B NO. 1 (LEFT KICK PANEL)
1C	18	COWL WIRE AND J/B NO. 1 (LEFT KICK PANEL)
1D	18	FLOOR WIRE AND J/B NO. 1 (LEFT KICK PANEL)
1F	18	COWL SUB WIRE AND J/B NO. 1 (LEFT KICK PANEL)
1G		
1I	18	COWL WIRE AND J/B NO. 1 (LEFT KICK PANEL)
1K		
1L		
1N		
2F	20	ENGINE ROOM MAIN WIRE AND J/B NO. 2 (ENGINE COMPARTMENT LEFT)

: CONNECTOR JOINING WIRE HARNESS AND WIRE HARNESS

CODE	SEE PAGE	JOINING WIRE HARNESS AND WIRE HARNESS (CONNECTOR LOCATION)
E2	34	FRONT DOOR LH WIRE AND COWL WIRE (LEFT KICK PANEL)
F2	34	INSTRUMENT PANEL WIRE AND COWL SUB WIRE (LEFT KICK PANEL)
M1	34	COWL WIRE AND ROOF WIRE (INSTRUMENT PANEL RIGHT)
N1	34	FLOOR NO. 2 WIRE AND COWL WIRE (RIGHT KICK PANEL)
O1	34	FRONT DOOR RH WIRE AND COWL WIRE (RIGHT KICK PANEL)
P1	36 (S/D)	ROOF NO. 2 WIRE AND ROOF WIRE (W/ MOON ROOF, ROOF RIGHT)
	38 (STATION W/G)	
V2	36	FLOOR NO. 1 WIRE AND LUGGAGE ROOM NO. 1 WIRE (BACK PANEL LEFT)
V3	36	FLOOR NO. 1 WIRE AND LUGGAGE ROOM NO. 1 WIRE (BACK PANEL LEFT)
W1	38	BACK DOOR NO. 1 WIRE AND FLOOR NO. 1 WIRE (BACK PANEL LEFT)
X1	38	LUGGAGE ROOM NO. 3 WIRE AND FLOOR NO. 1 WIRE (BACK PANEL LEFT)
Y1	38	BACK DOOR NO. 1 WIRE AND BACK DOOR NO. 2 WIRE (BACK DOOR LEFT)
b1	36 (S/D)	INTERIOR LIGHT WIRE AND ROOF WIRE (W/ MOON ROOF, ROOF RIGHT)
	38 (STATION W/G)	

: GROUND POINTS

CODE	SEE PAGE	GROUND POINTS LOCATION
D	34	J/B NO. 1 SET BOLT
G	36 (S/D) 38 (STATION W/G)	ROOF RIGHT (W/ MOON ROOM)
L	38	BACK DOOR RIGHT

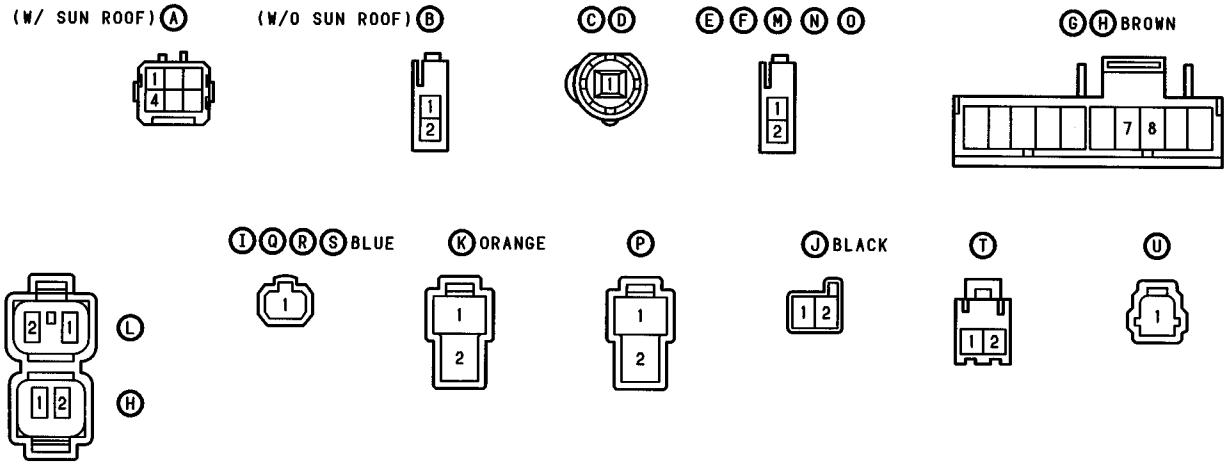

INTERIOR LIGHTS (w/o DOOR LOCK)

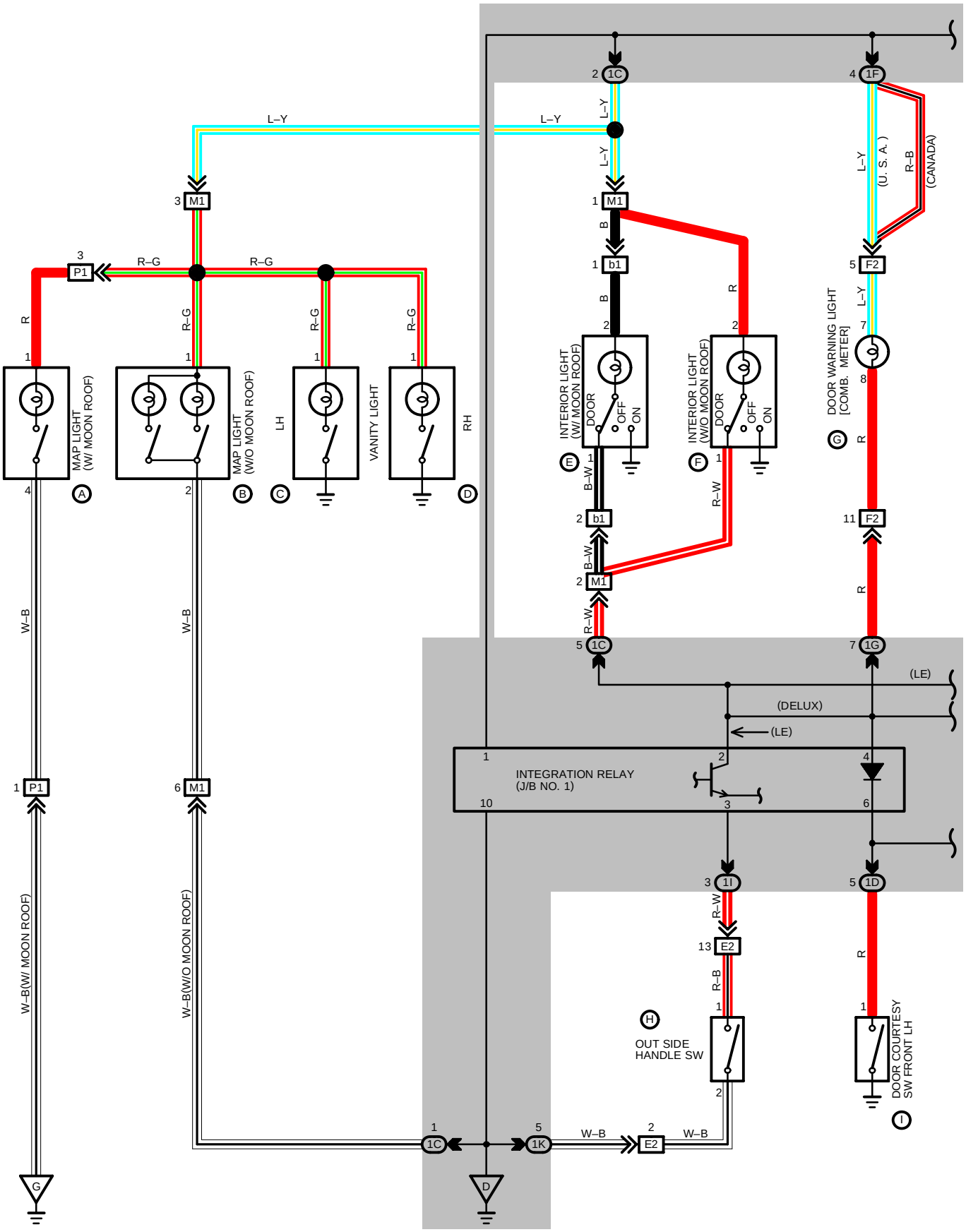

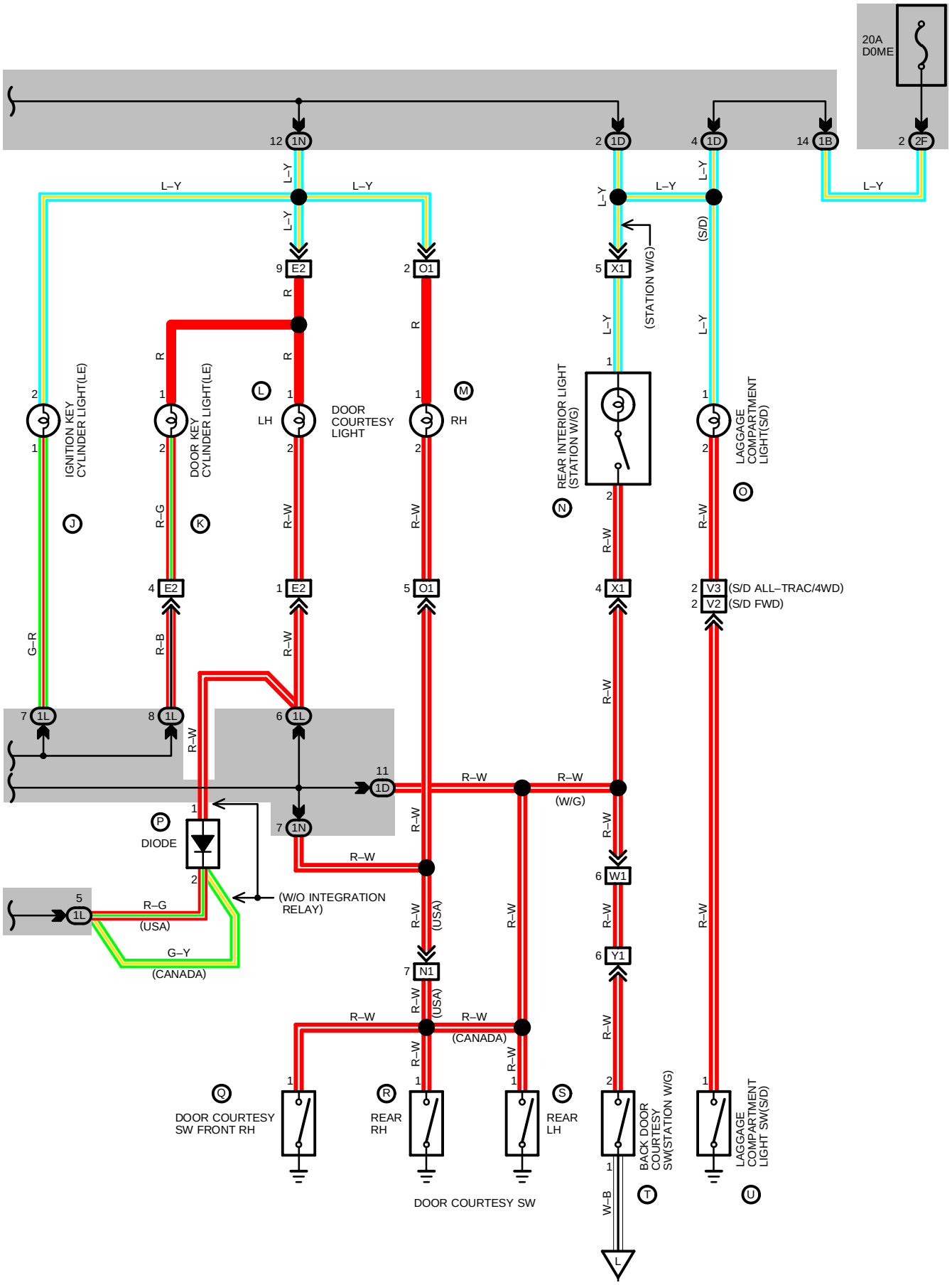
20A
D0ME
12 1N
2 1D
4 1D
14 1B
2 2F
L–Y
9 E2
2 O1
5 X1
(STATION W/G)
(S/D)
R
R–G
R–W
R–B
G–R
IGNITION KEY CYLINDER LIGHT(LE)
DOOR KEY CYLINDER LIGHT(LE)
LH
DOOR COURTESY LIGHT
RH
REAR INTERIOR LIGHT (STATION W/G)
LAGGAGE COMPARTMENT LIGHT(S/D)
J
K
L
M
N
O
4 E2
1 E2
5 O1
4 X1
2 V3 (S/D ALL–TRAC/4WD)
2 V2 (S/D FWD)
7 1L
8 1L
6 1L
11 1D
7 1N
(W/G)
P
DIODE
(W/O INTEGRATION RELAY)
5 1L
(USA)
G–Y
(CANADA)
6 W1
6 Y1
7 N1
Q
DOOR COURTESY SW FRONT RH
R
REAR RH
S
REAR LH
DOOR COURTESY SW
BACK DOOR COURTESY SW(STATION W/G)
W–B
T
LAGGAGE COMPARTMENT LIGHT SW(S/D)
U

INTERIOR LIGHTS (w/o DOOR LOCK)

SERVICE HINTS

INTEGRATION RELAY NO. 1 (J/B NO. 1)

(1G) 7–GROUND : APPROX. **12** VOLTS WITH DOOR CLOSED
0 VOLT WITH ANY DOOR OPEN

20A DOME FUSE : ALWAYS **12** VOLTS

(1I) 3–GROUND : APPROX. **12** VOLTS WITH DRIVER'S DOOR OUTSIDE HANDLE HOLD UP

(1L) 7–GROUND : APPROX. **12** VOLTS WITH DOOR CLOSED
0 VOLT WITH ANY DOOR OPEN
0 VOLT → **12** VOLTS WITHIN **8.5** SECONDS AFTER DOOR CLOSED OR AFTER DRIVER'S DOOR OUTSIDE HANDEL HOLD UP

(H) OUTSIDE HANDLE SW (DRIVER'S DOOR)
1–3 : CLOSED WITH DRIVER'S DOOR OUTSIDE HANL HOLD UP

(I) (Q) (R) (S) DOOR COURTESY SW
1–GROUND : CLOSED WITH DOOR OPEN

(T) BACK DOOR COURTESY SW (W/G)
2–GROUND : CLOSED WITH BACK DOOR OPEN

(U) LUGGAGE COMPARTMENT LIGHT SW
1–GROUND : CLOSED WITH LUGGAGE COMPARTMENT DOOR OPEN

: PARTS LOCATION

CODE		SEE PAGE	CODE		SEE PAGE	CODE		SEE PAGE
A	M5	26 (S/D), 27 (STATION W/G)	**I**	D19	26 (S/D), 27 (STATION W/G)	**Q**	D20	26 (S/D), 27 (STATION W/G)
B	M1	26 (S/D), 27 (STATION W/G)	**J**	I10	28	**Q**	D21	26 (S/D), 27 (STATION W/G)
C	V1	26 (S/D), 27 (STATION W/G)	**K**	D25	26 (S/D), 27 (STATION W/G)	**R**	D23	26 (S/D), 27 (STATION W/G)
D	V2	26 (S/D), 27 (STATION W/G)	**L**	D17	26 (S/D), 27 (STATION W/G)	**R**	D24	26 (S/D), 27 (STATION W/G)
E	I13	26 (S/D), 27 (STATION W/G)	**M**	D18	26 (S/D), 27 (STATION W/G)	**S**	D22	26 (S/D), 27 (STATION W/G)
F	I13	26 (S/D), 27 (STATION W/G)	**N**	R15	27	**T**	B8	27
G	C11	28	**O**	L4	26	**U**	L5	26
H	D25	26 (S/D), 27 (STATION W/G)	**P**	D13	28			

: JUNCTION BLOCK AND WIRE HARNESS CONNECTOR

CODE	SEE PAGE	JUNCTION BLOCK AND WIRE HARNESS (CONNECTOR LOCATION)
1B	18	ENGINE ROOM MAIN WIRE AND J/B NO. 1 (LEFT KICK PANEL)
1C	18	COWL WIRE AND J/B NO. 1 (LEFT KICK PANEL)
1D	18	FLOOR WIRE AND J/B NO. 1 (LEFT KICK PANEL)
1F	18	COWL SUB WIRE AND J/B NO. 1 (LEFT KICK PANEL)
1G		
1I	18	COWL WIRE AND J/B NO. 1 (LEFT KICK PANEL)
1K		
1L		
1N		
2F	20	ENGINE ROOM MAIN WIRE AND J/B NO. 2 (ENGINE COMPARTMENT LEFT)

: CONNECTOR JOINING WIRE HARNESS AND WIRE HARNESS

CODE	SEE PAGE	JOINING WIRE HARNESS AND WIRE HARNESS (CONNECTOR LOCATION)
E2	34	FRONT DOOR LH WIRE AND COWL WIRE (LEFT KICK PANEL)
F2	34	INSTRUMENT PANEL WIRE AND COWL SUB WIRE (LEFT KICK PANEL)
M1	34	COWL WIRE AND ROOF WIRE (INSTRUMENT PANEL RIGHT)
N1	34	FLOOR NO. 2 WIRE AND COWL WIRE (RIGHT KICK PANEL)
O1	34	FRONT DOOR RH WIRE AND COWL WIRE (RIGHT KICK PANEL)
P1	36 (S/D)	ROOF NO. 2 WIRE AND ROOF WIRE (W/ MOON ROOF, ROOF RIGHT)
	38 (STATION W/G)	
V2	36	FLOOR NO. 1 WIRE AND LUGGAGE ROOM NO. 1 WIRE (BACK PANEL LEFT)
V3	36	FLOOR NO. 1 WIRE AND LUGGAGE ROOM NO. 1 WIRE (BACK PANEL LEFT)
W1	38	BACK DOOR NO. 1 WIRE AND FLOOR NO. 1 WIRE (BACK PANEL LEFT)
X1	38	LUGGAGE ROOM NO. 3 WIRE AND FLOOR NO. 1 WIRE (BACK PANEL LEFT)
Y1	38	BACK DOOR NO. 1 WIRE AND BACK DOOR NO. 2 WIRE (BACK DOOR LEFT)
b1	36 (S/D)	INTERIOR LIGHT WIRE AND ROOF WIRE (W/ MOON ROOF, ROOF LIGHT)
	38 (STATION W/G)	

: GROUND POINTS

CODE	SEE PAGE	GROUND POINTS LOCATION
D	34	J/B NO. 1 SET BOLT
G	36 (S/D) 38 (STATION W/G)	ROOF RIGHT (W/ MOON ROOM)
L	38	BACK DOOR RIGHT

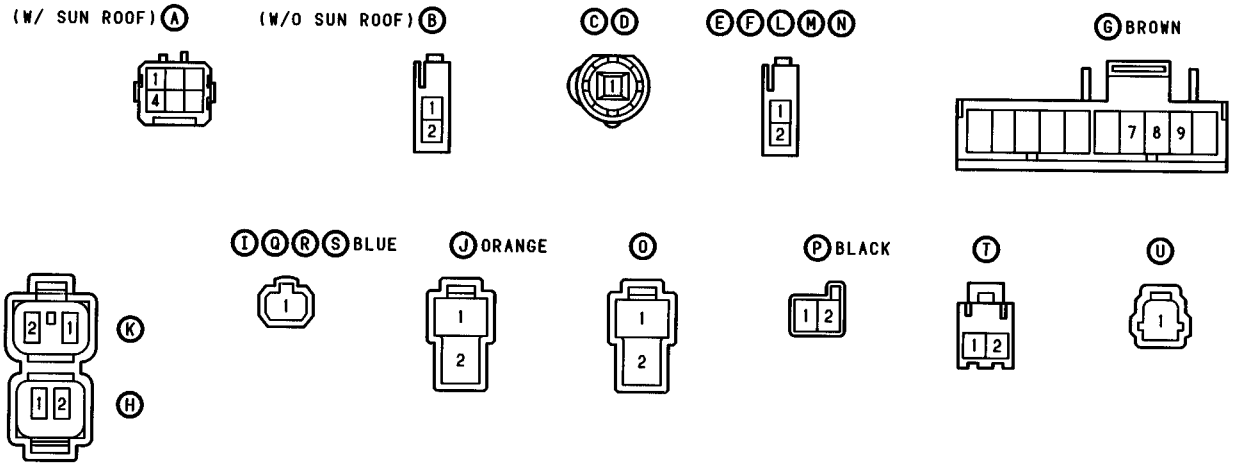

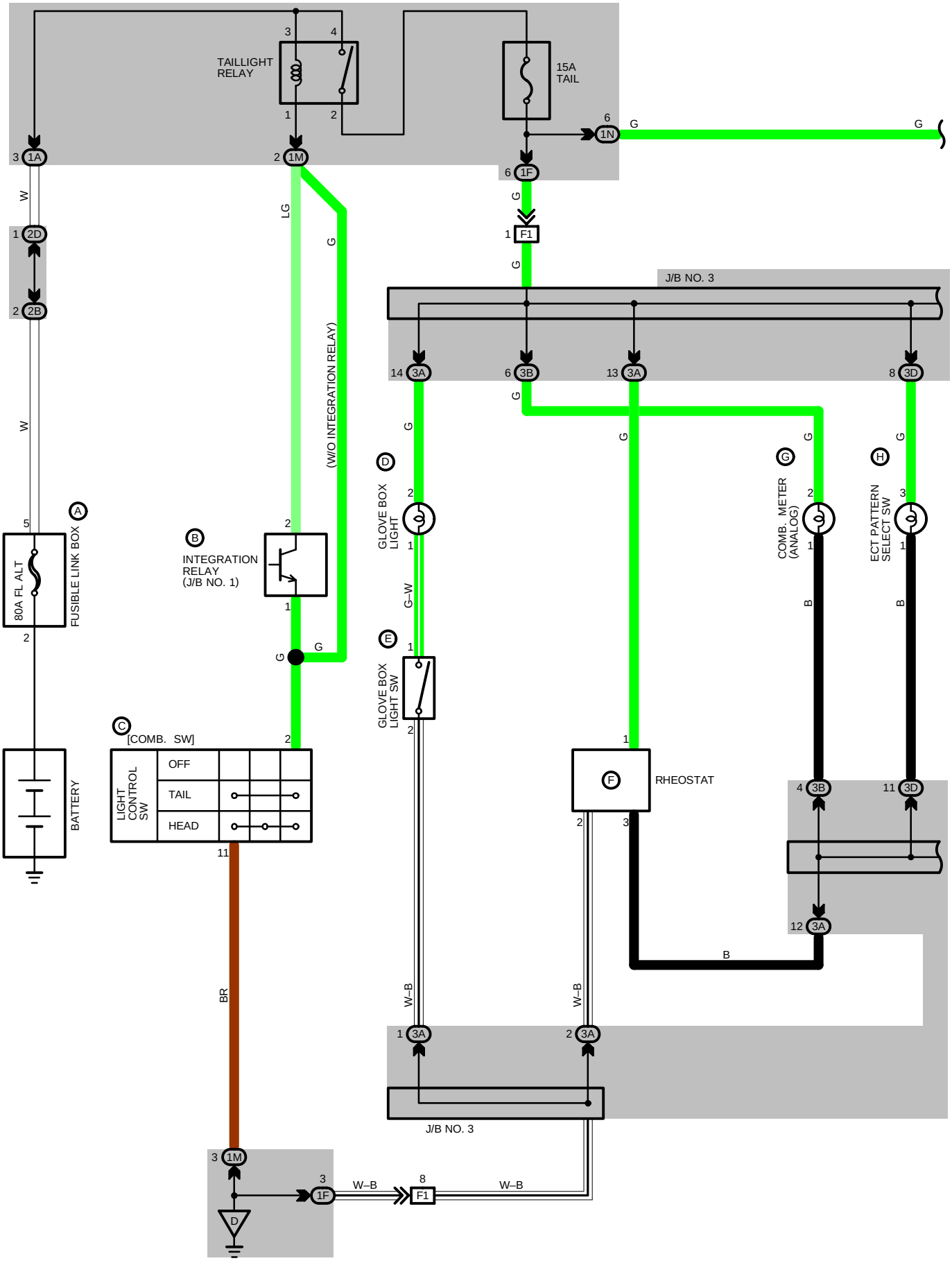
TAILLIGHT RELAY
15A TAIL
J/B NO. 3
(W/O INTEGRATION RELAY)
INTEGRATION RELAY (J/B NO. 1)
FUSIBLE LINK BOX
80A FL ALT
BATTERY
[COMB. SW]
LIGHT CONTROL SW
OFF
TAIL
HEAD
GLOVE BOX LIGHT
GLOVE BOX LIGHT SW
COMB. METER (ANALOG)
ECT PATTERN SELECT SW
RHEOSTAT
J/B NO. 3
W
LG
G
G–W
W–B
BR
B

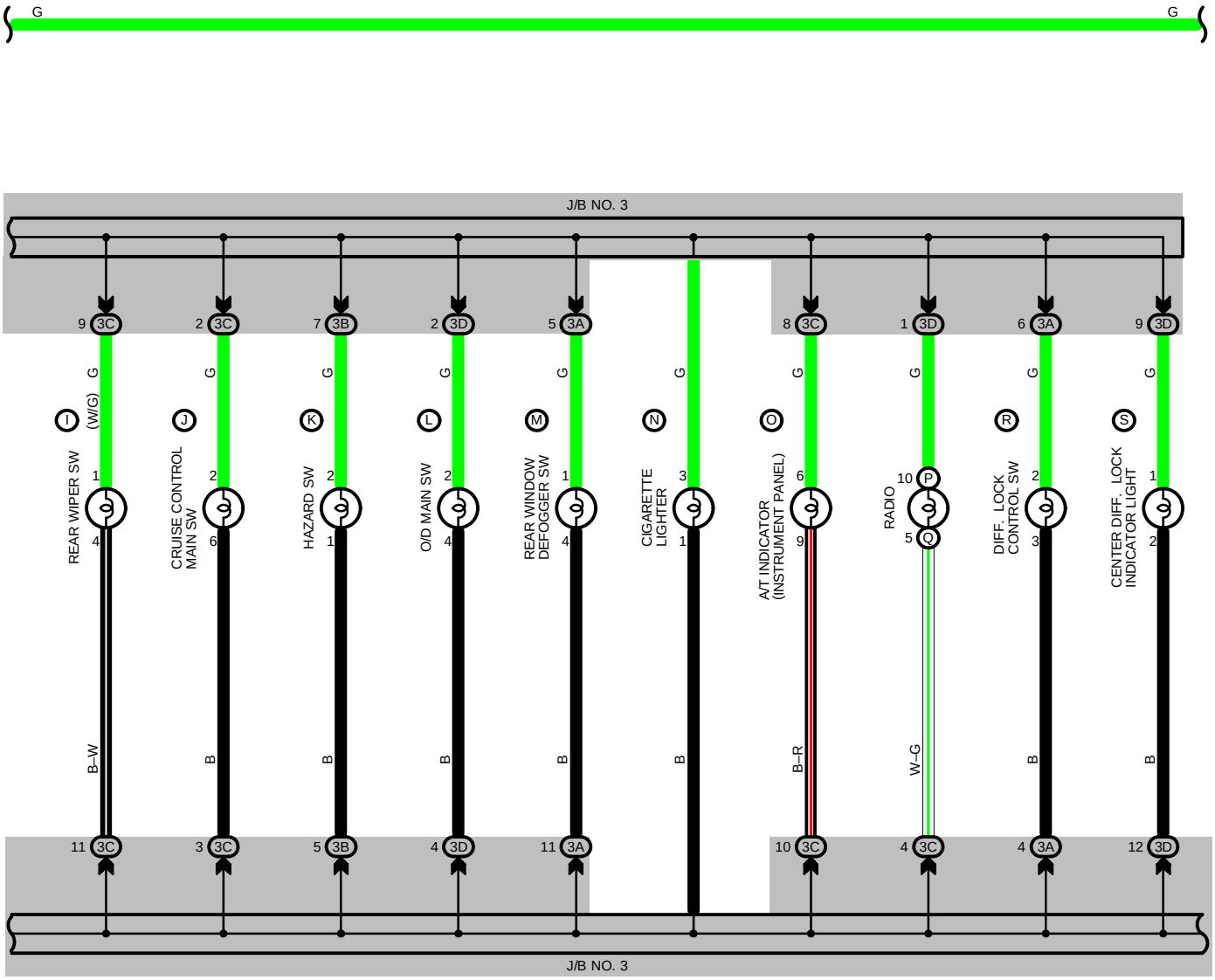
G
G
J/B NO. 3
9 3C
2 3C
7 3B
2 3D
5 3A
8 3C
1 3D
6 3A
9 3D
I
J
K
L
M
N
O
R
S
G
(W/G)
REAR WIPER SW
CRUISE CONTROL MAIN SW
HAZARD SW
O/D MAIN SW
REAR WINDOW DEFOGGER SW
CIGARETTE LIGHTER
A/T INDICATOR (INSTRUMENT PANEL)
RADIO
DIFF. LOCK CONTROL SW
CENTER DIFF. LOCK INDICATOR LIGHT
B–W
B
B
B
B
B
B–R
W–G
B
B
11 3C
3 3C
5 3B
4 3D
11 3A
10 3C
4 3C
4 3A
12 3D
J/B NO. 3

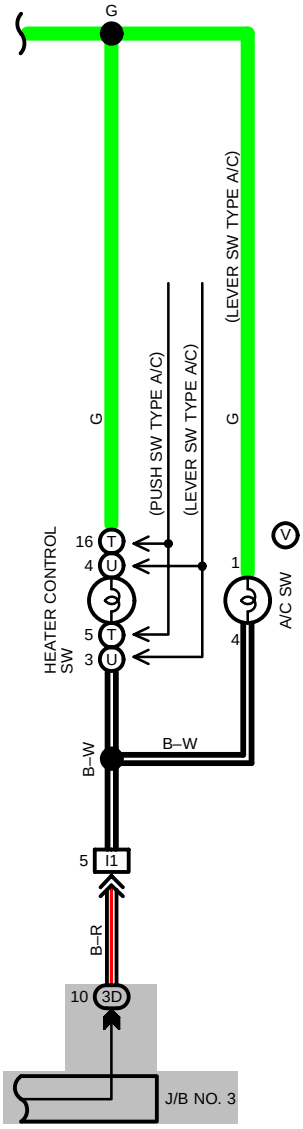
G
(LEVER SW TYPE A/C)
G
(PUSH SW TYPE A/C)
(LEVER SW TYPE A/C)
G
V
16 T
4 U
5 T
3 U
HEATER CONTROL SW
1
4
A/C SW
B–W
B–W
5 I1
B–R
10 3D
J/B NO. 3

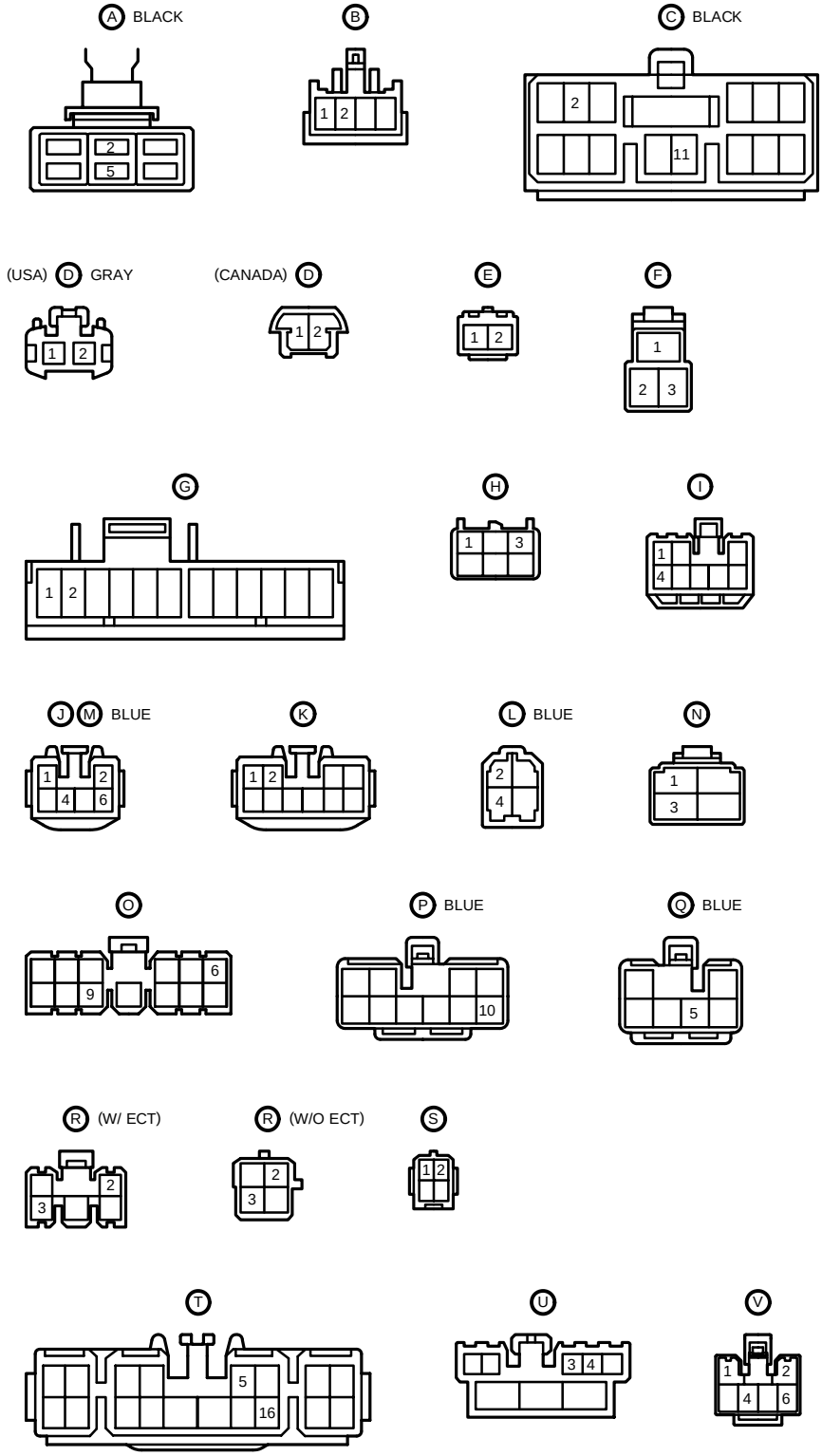
A BLACK
B
C BLACK
(USA) D GRAY
(CANADA) D
E
F
G
H
I
J M BLUE
K
L BLUE
N
O
P BLUE
Q BLUE
R (W/ ECT)
R (W/O ECT)
S
T
U
V

SERVICE HINTS

TAILLIGHT RELAY

2–4 : CLOSED WITH LIGHT CONTROL SW AT **TAIL** OR **HEAD** POSITION (LIGHT AUTO TURN OFF SYSTEM OFF)
CLOSED WITH ENGINE RUNNING

(B) INTEGRATION RELAY

PLEASE REFFER TO LIGHT AUTO TURN OFF SYSTEM (SEE PAGE 69)

RHEOSTAT

(F) 1–2, : APPROX. **12** VOLTS WITH RHEOSTAT FULLY TURNED COUNTERCLOCKWISE AND **0** VOLTS WITH FULLY TURNED CLOCK WISE

: PARTS LOCATION

CODE		SEE PAGE	CODE		SEE PAGE	CODE		SEE PAGE
A	F6	24 (2VZ–FE), 25 (3S–FE)	**H**	E5	28	**P**	R5	28
B	I12	28	**I**	R7	28	**Q**	R4	28
C	C14	28	**J**	C18	28	**R**	R7	28
D	G1	28	**K**	H5	28	**S**	C6	28
E	G2	28 (CANADA)	**L**	O1	28	**T**	H6	28
E	G3	28 (USA)	**M**	R6	28	**U**	H7	28
F	R10	28	**N**	C7	28	**V**	H6	28
G	C11	28	**O**	A26	28			

: JUNCTION BLOCK AND WIRE HARNESS CONNECTOR

CODE	SEE PAGE	JUNCTION BLOCK AND WIRE HARNESS (CONNECTOR LOCATION)
1A	18	ENGINE ROOM MAIN WIRE AND J/B NO. 1 (LEFT KICK PANEL)
1F	18	COWL SUB WIRE AND J/B NO. 1 (LEFT KICK PANEL)
1M	18	COWL WIRE AND J/B NO. 1 (LEFT KICK PANEL)
1N		
2B	20	ENGINE WIRE AND J/B NO. 2 (ENGINE COMPARTMENT LEFT)
2D	20	ENGINE ROOM MAIN WIRE AND J/B NO. 2 (ENGINE COMPARTMENT LEFT)
3A	22	INSTRUMENT PANEL WIRE AND J/B NO. 3 (INSTRUMENT PANEL LEFT)
3B		
3C		
3D		

: CONNECTOR JOINING WIRE HARNESS AND WIRE HARNESS

CODE	SEE PAGE	JOINING WIRE HARNESS AND WIRE HARNESS (CONNECTOR LOCATION)
F1	34	INSTRUMENT PANEL WIRE AND COWL SUB WIRE (LEFT KICK PANEL)
I1	34	COWL WIRE AND INSTRUMENT PANEL WIRE (INSTRUMENT PANEL CENTER)

: GROUND POINTS

CODE	SEE PAGE	GROUND POINTS LOCATION
D	34	J/B NO. 1 SET BOLT

TAILLIGHTS

○ (W/ LIGHT FAILURE SENSOR)
□ (W/O LIGHT FAILURE SENSOR)

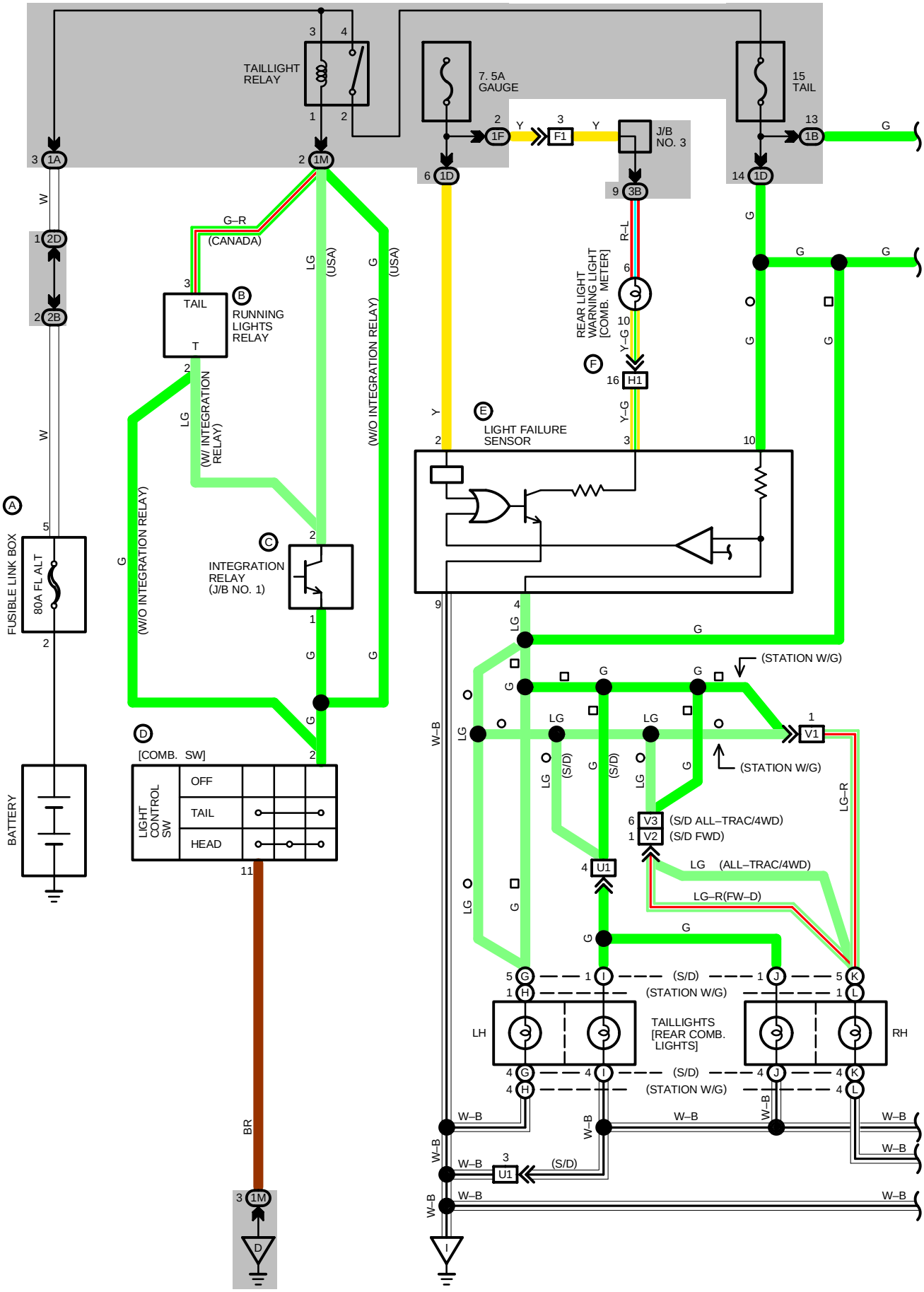

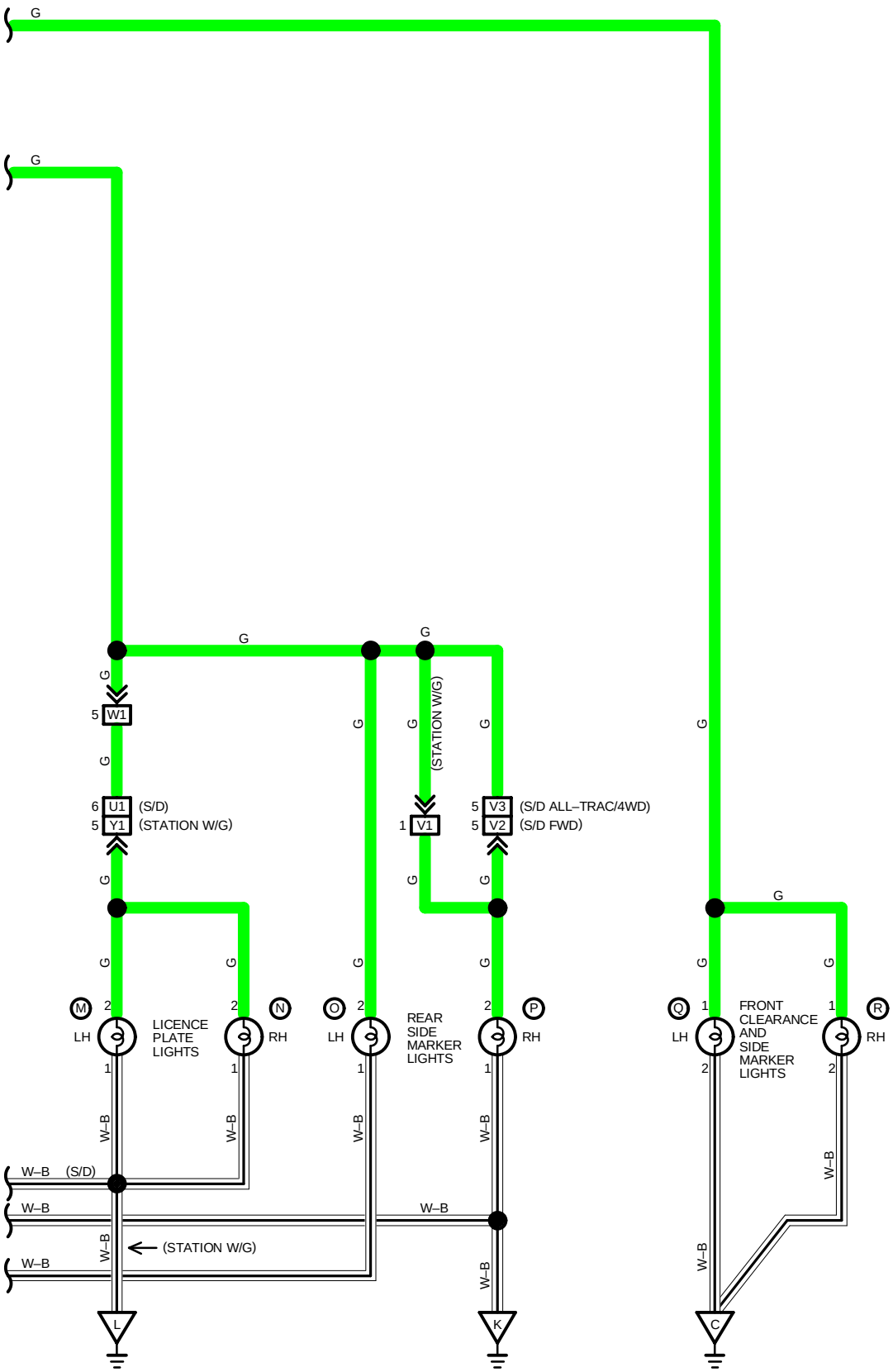
G
G
G

TAILLIGHTS

SYSTEM OUTLINE

WHEN THE LIGHT CONTROL SW IS TURNED TO TAIL OR HEAD POSITION, THE CURRENT FLOWS TO TERMINAL 10 OF THE LIGHT FAILURE SENSOR THROUGH THE TAIL FUSE.

WHEN THE IGNITION SW IS TURNED ON, THE CURRENT FLOWS FROM THE GAUGE FUSE TO TERMINAL 2 OF THE LIGHT FAILURE SENSOR AND THROUGH THE REAR LIGHT WARNING LIGHT TO TERMINAL 3 OF THE LIGHT FAILURE SENSOR.

TAIL LIGHT DISCONNECTION WARNING

WITH THE IGNITION SW ON AND THE LIGHT CONTROL SW TURNED TO TAIL OR HEAD POSITION, IF THE TAILLIGHT CIRCUIT IS OPEN, THE LIGHT FAILURE SENSOR DETECTS THE FAILURE BY THE CHANGE IN CURRENT FLOWING FROM TERMINAL 10 OF THE LIGHT FAILURE SENSOR TO TERMINAL 4, AND THE WARNING CIRCUIT OF THE LIGHT FAILURE SENSOR IS ACTIVATED.

AS A RESULT, THE CURRENT FLOWS FROM TERMINAL 3 OF THE LIGHT FAILURE SENSOR → TERMINAL 9 → GROUND AND TURNS THE REAR LIGHT WARNING LIGHT ON, WHICH REMAINS ON UNTIL THE LIGHT CONTROL SW IS TURNED OFF.

SERVICE HINTS

TAILLIGHT RELAY

2–4 : CLOSED WITH LIGHT CONTROL SW AT **TAIL** OR **HEAD** POSITION (INTEGRATION RELAY ON)
CLOSED WITH ENGINE RUNNING

(C) INTEGRATION RELAY

PLEASE REFER TO LIGHT AUTO TURN OFF SYSTEM (SEE PAGE 69)

(E) LIGHT FAILURE SENSOR

(DISCONNECT THE FAILURE SENSOR AND INSPECT THE CONNECTOR)
10–GROUND : APPROX. **12** VOLTS WITH LIGHT CONTROL SW AT **TAIL** OR **HEAD** POSITION
3–GROUND : APPROX. **12** VOLTS WITH ENGINE RUNNING
2–GROUND : APPROX. **12** VOLTS WITH IGNITION SW ON
9–GROUND : CONTINUITY
4–GROUND : CONTINUITY

○ : PARTS LOCATION

CODE		SEE PAGE	CODE		SEE PAGE	CODE		SEE PAGE
A	F6	24 (2VZ–FE), 25 (3S–FE)	**G**	R11	26	**M**	L1	26 (S/D), 27 (STATION W/G)
B	R2	28 (CANADA)	**H**	R11	27	**N**	L2	26 (S/D), 27 (STATION W/G)
C	I12	28	**I**	R12	26	**O**	R16	26 (S/D), 27 (STATION W/G)
D	C14	28	**J**	R13	26	**P**	R17	26 (S/D), 27 (STATION W/G)
E	L3	26 (S/D), 27 (STATION W/G)	**K**	R14	26	**Q**	F1	24 (2VZ–FE), 25 (3S–FE)
F	C13	28	**L**	R14	27	**R**	F2	24 (2VZ–FE), 25 (3S–FE)

⬭ : JUNCTION BLOCK AND WIRE HARNESS CONNECTOR

CODE	SEE PAGE	JUNCTION BLOCK AND WIRE HARNESS (CONNECTOR LOCATION)
1A	18	ENGINE ROOM MAIN WIRE AND J/B NO. 1 (LEFT KICK PANEL)
1B		
1D	18	FLOOR WIRE AND J/B NO. 1 (LEFT KICK PANEL)
1F	18	COWL SUB WIRE AND J/B NO. 1 (LEFT KICK PANEL)
1M	18	COWL WIRE AND J/B NO. 1 (LEFT KICK PANEL)
2B	20	ENGINE WIRE AND J/B NO. 2 (ENGINE COMPARTMENT LEFT)
2D	20	ENGINE ROOM MAIN WIRE AND J/B NO. 2 (ENGINE COMPARTMENT LEFT)
3B	22	INSTRUMENT PANEL WIRE AND J/B NO. 3 (INSTRUMENT PANEL LEFT)

▭ : CONNECTOR JOINING WIRE HARNESS AND WIRE HARNESS

CODE	SEE PAGE	JOINING WIRE HARNESS AND WIRE HARNESS (CONNECTOR LOCATION)
F1	34	INSTRUMENT PANEL WIRE AND COWL SUB WIRE (LEFT KICK PANEL)
H1	34	FLOOR NO. 1 WIRE AND INSTRUMENT PANEL WIRE (LEFT KICK PANEL)
U1	36	FLOOR NO. 1 WIRE AND LUGGAGE ROOM NO. 2 WIRE (LUGGAGE COMPARTMENT DOOR)
V1	38	LUGGAGE ROOM NO. 1 WIRE AND FLOOR NO. 1 WIRE (BACK PANEL LEFT)
V2	36	FLOOR NO. 1 WIRE AND LUGGAGE ROOM NO. 1 WIRE (BACK PANEL LEFT)
V3		
W1	38	BACK DOOR NO. 1 WIRE AND FLOOR NO. 1 WIRE (BACK PANEL LEFT)
Y1	38	BACK DOOR NO. 1 WIRE AND BACK DOOR NO. 2 WIRE (BACK DOOR LEFT)

: GROUND POINTS

CODE	SEE PAGE	GROUND POINTS LOCATION
C	30 (2VZ–FE)	RADIATOR LEFT
	32 (3S–FE)	
D	34	J/B NO. 1 SET BOLT
I	36 (S/D)	LEFT REAR FENDER
	38 (STATION W/G)	
K	36 (S/D)	BACK PANEL CENTER
	38 (STATION W/G)	
L	38	DECK RIGHT

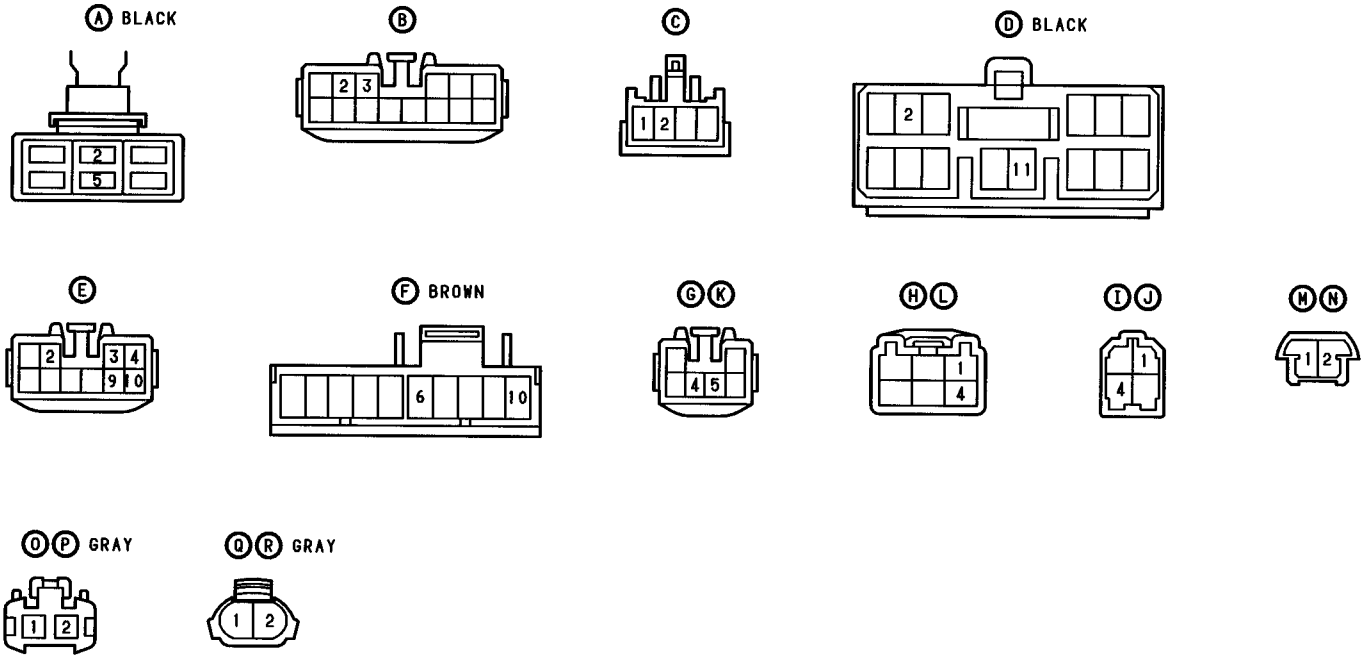

TURN SIGNAL AND HAZARD WARNING LIGHTS

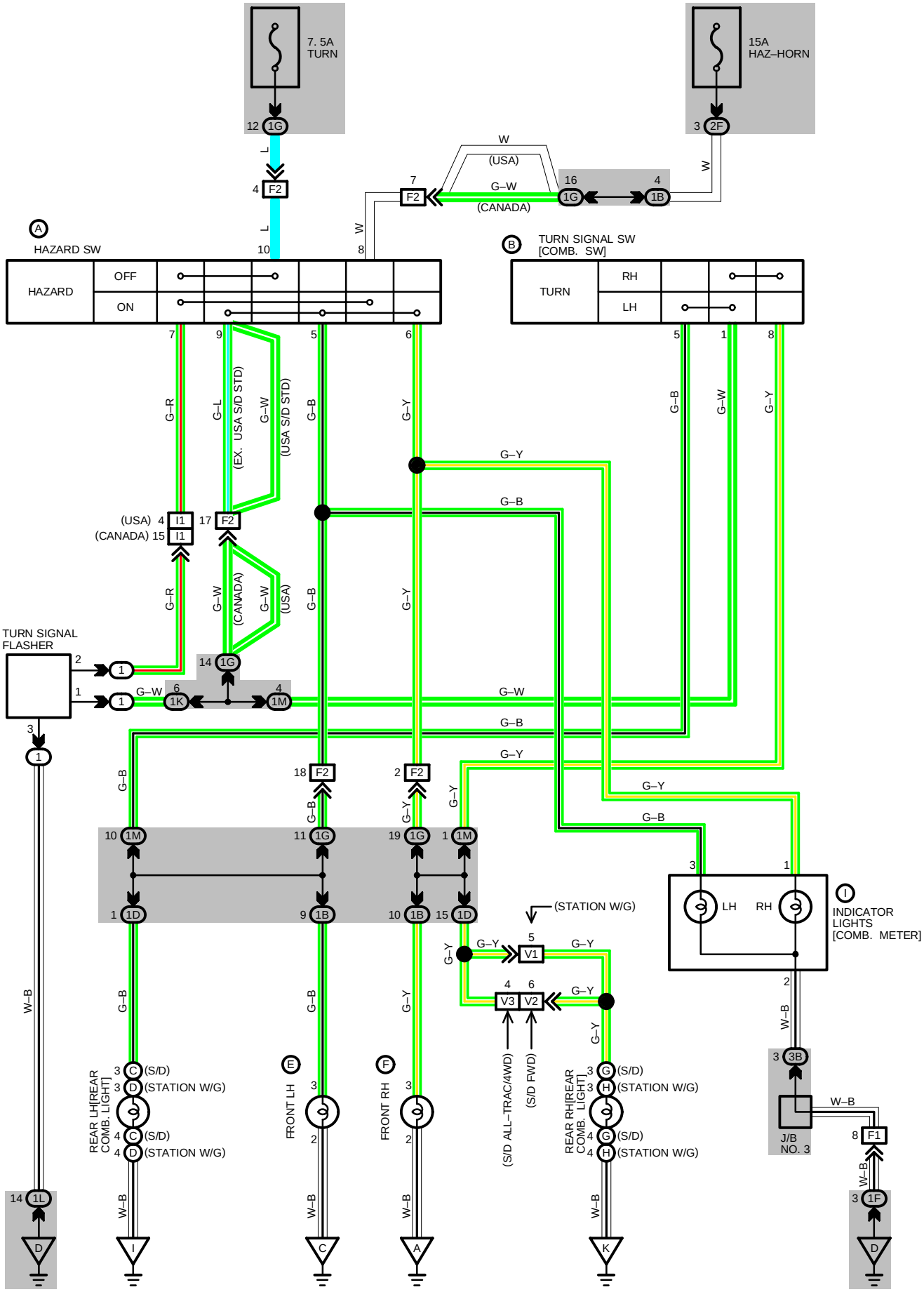

SERVICE HINTS

TURN SIGNAL FLASHER

2–GROUND : APPROX. **12** VOLTS WITH IGNITION SW ON OR HAZARD SW ON
1–GROUND : CHANGES FROM **12** TO **0** VOLT WITH IGNITION SW ON AND TURN SIGNAL SW LEFT OR RIGHT, OR WITH HAZARD SW ON
3–GROUND : ALWAYS CONTINUITY

: PARTS LOCATION

CODE		SEE PAGE	CODE		SEE PAGE	CODE		SEE PAGE
A	H5	28	**D**	R11	27	**G**	R14	26
B	C14	28	**E**	F3	24 (2VZ–FE), 25 (3S–FE)	**H**	R14	27
C	R11	26	**F**	F4	24 (2VZ–FE), 25 (3S–FE)	**I**	C12	28

: RELAY BLOCKS

CODE	SEE PAGE	RELAY BLOCKS (RELAY BLOCK LOCATION)
1	23	R/B NO. 1 (LEFT KICK PANEL)

: JUNCTION BLOCK AND WIRE HARNESS CONNECTOR

CODE	SEE PAGE	JUNCTION BLOCK AND WIRE HARNESS (CONNECTOR LOCATION)
1B	18	ENGINE ROOM MAIN WIRE AND J/B NO. 1 (LEFT KICK PANEL)
1D	18	FLOOR WIRE AND J/B NO. 1 (LEFT KICK PANEL)
1F	18	COWL SUB WIRE AND J/B NO. 1 (LEFT KICK PANEL)
1G		
1K	18	COWL WIRE AND J/B NO. 1 (LEFT KICK PANEL)
1L		
1M		
2F	20	ENGINE ROOM MAIN WIRE AND J/B NO. 2 (ENGINE COMPARTMENT LEFT)
3B	22	INSTRUMENT PANEL WIRE AND J/B NO. 3 (INSTRUMENT PANEL LEFT)

: CONNECTOR JOINING WIRE HARNESS AND WIRE HARNESS

CODE	SEE PAGE	JOINING WIRE HARNESS AND WIRE HARNESS (CONNECTOR LOCATION)
F1	34	INSTRUMENT PANEL WIRE AND COWL SUB WIRE (LEFT KICK PANEL)
F2	34	INSTRUMENT PANEL WIRE AND COWL SUB WIRE (LEFT KICK PANEL)
I1	34	COWL WIRE AND INSTRUMENT PANEL WIRE (INSTRUMENT PANEL CENTER)
V1	38	LUGGAGE ROOM NO. 1 WIRE AND FLOOR NO. 1 WIRE (BACK PANEL LEFT)
V2	36	FLOOR NO. 1 WIRE AND LUGGAGE ROOM NO. 1 WIRE (BACK PANEL LEFT)
V3	36	

: GROUND POINTS

CODE	SEE PAGE	GROUND POINTS LOCATION
A	30 (2VS–FE)	RIGHT FENDER
	32 (3S–FE)	
C	30 (2VS–FE)	RADIATOR LEFT
	32 (3S–FE)	
D	34	J/B NO. 1 SET BOLT
I	36 (S/D)	LEFT REAR FENDER
	38 (STATION W/G)	
K	36 (S/D)	BACK PANEL CENTER
	38 (STATION W/G)	DECK RIGHT

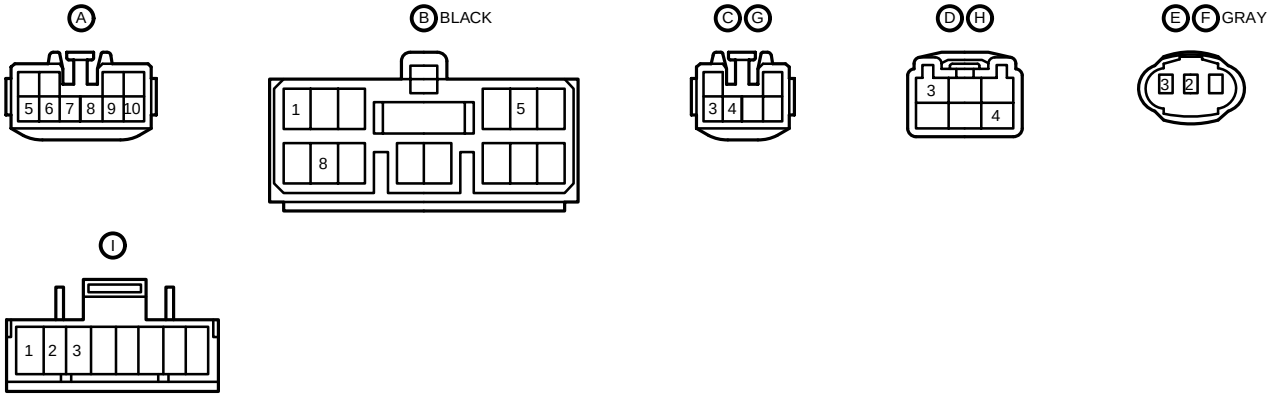

STOP LIGHTS

○ (W/ LIGHT FAILURE SENSOR)
□ (W/O LIGHT FAILURE SENSOR)

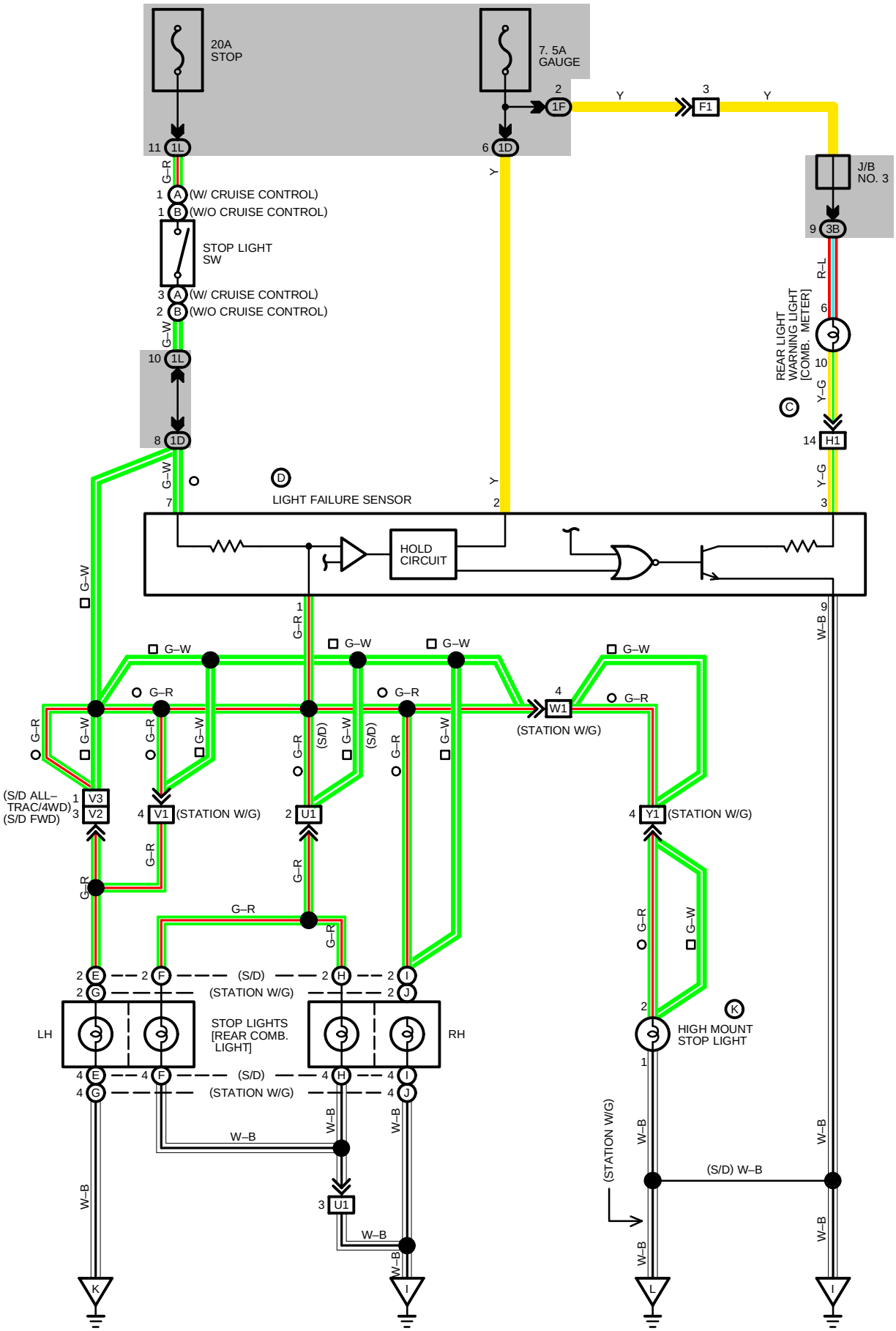

SYSTEM OUTLINE

CURRENT IS APPLIED AT ALL TIMES THROUGH A STOP FUSE TO TERMINAL 1 OF THE STOP LIGHT SW.

WHEN THE IGNITION SW IS TURNED ON, CURRENT FLOWS FROM THE GAUGE FUSE TO TERMINAL 2 OF THE LIGHT FAILURE SENSOR AND THROUGH THE REAR LIGHT WARNING LIGHT TO TERMINAL 3 OF THE LIGHT FAILURE SENSOR.

STOP LIGHT DISCONNECTION WARNING

WHEN THE IGNITION SW IS TURNED ON AND THE BRAKE PEDAL IS PRESSED (STOP LIGHT SW ON), IF THE STOP LIGHT CIRCUIT IS OPEN, THE CURRENT FLOWING FROM TERMINAL 7 OF THE LIGHT FAILURE SENSOR TO TERMINAL 1 CHANGES, SO THE LIGHT FAILURE SENSOR DETECTS THE DISCONNECTION AND THE WARNING CIRCUIT OF THE LIGHT FAILURE SENSOR IS ACTIVATED.

AS A RESULT, THE CURRENT FLOWS FROM TERMINAL 3 OF THE LIGHT FAILURE SENSOR → TERMINAL 9 → GROUND AND TURNS THE REAR LIGHT WARNING LIGHT ON. BY PRESSING THE BRAKE PEDAL, THE CURRENT FLOWING TO TERMINAL 2 OF THE LIGHT FAILURE SENSOR KEEPS THE WARNING CIRCUIT ON HOLD AND THE WARNING LIGHT ON UNTIL THE IGNITION SW TURNED OFF.

SERVICE HINTS

STOP LIGHT SW

(A) 1–**(A)** 3 : CLOSED WITH BRAKE PEDAL DEPRESSED (W/ CRUISE CONTROL)
(B) 1–**(B)** 2 : CLOSED WITH BRAKE PEDAL DEPRESSED (W/O CRUISE CONTROL)

(D) LIGHT FAILURE SENSOR

1, 7–GROUND : APPROX. **12** VOLTS WITH STOP LIGHT SW **ON**
2, 3–GROUND : APPROX. **12** VOLTS WITH IGNITION SW **ON**
9–GROUND : ALWAYS CONTINUITY

○ : PARTS LOCATION

CODE		SEE PAGE	CODE		SEE PAGE	CODE		SEE PAGE
A	S9	28	**E**	R11	26	**I**	R14	26
B	S9	28	**F**	R12	26	**J**	R14	27
C	C13	28	**G**	R11	27	**K**	H8	26 (S/D), 27 (STATION W/G)
D	L3	26 (S/D), 27 (STATION W/G)	**H**	R13	26			

: JUNCTION BLOCK AND WIRE HARNESS CONNECTOR

CODE	SEE PAGE	JUNCTION BLOCK AND WIRE HARNESS (CONNECTOR LOCATION)
1D	18	FLOOR WIRE AND J/B NO. 1 (LEFT KICK PANEL)
1F	18	COWL SUB WIRE AND J/B NO. 1 (LEFT KICK PANEL)
1L	18	COWL WIRE AND J/B NO. 1 (LEFT KICK PANEL)
3B	22	INSTRUMENT PANEL WIRE AND J/B NO. 3 (INSTRUMENT PANEL LEFT)

: CONNECTOR JOINING WIRE HARNESS AND WIRE HARNESS

CODE	SEE PAGE	JOINING WIRE HARNESS AND WIRE HARNESS (CONNECTOR LOCATION)
F1	34	INSTRUMENT PANEL WIRE AND COWL SUB WIRE (LEFT KICK PANEL)
H1	34	FLOOR NO. 1 WIRE AND INSTRUMENT PANEL WIRE (LEFT KICK PANEL)
U1	36	FLOOR NO. 1 WIRE AND LUGGAGE ROOM NO. 2 WIRE (LUGGAGE COMPARTMENT DOOR)
V1	38	LUGGAGE ROOM NO. 1 WIRE AND FLOOR NO. 1 WIRE (BACK PANEL LEFT)
V2	36	FLOOR NO. 1 WIRE AND LUGGAGE ROOM NO. 1 WIRE (BACK PANEL LEFT)
V3	36	
W1	38	BACK DOOR NO. 1 WIRE AND FLOOR NO. 1 WIRE (BACK PANEL LEFT)
Y1	38	BACK DOOR NO. 1 WIRE AND BACK DOOR NO. 2 WIRE (BACK DOOR LEFT)

▽ : GROUND POINTS

CODE	SEE PAGE	GROUND POINTS LOCATION
I	36 (S/D)	LEFT REAR FENDER
	38 (STATION W/G)	
K	36 (S/D)	BACK PANEL CENTER
	38 (STATION W/G)	DECK RIGHT
L	38	BACK DOOR RIGHT

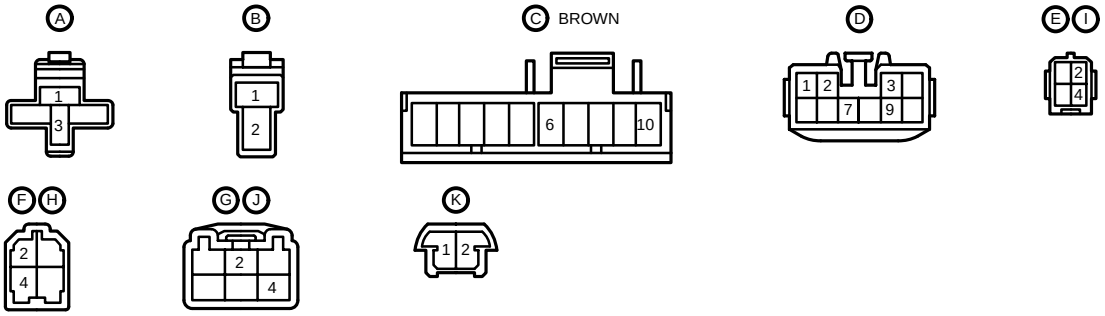

BACK–UP LIGHTS

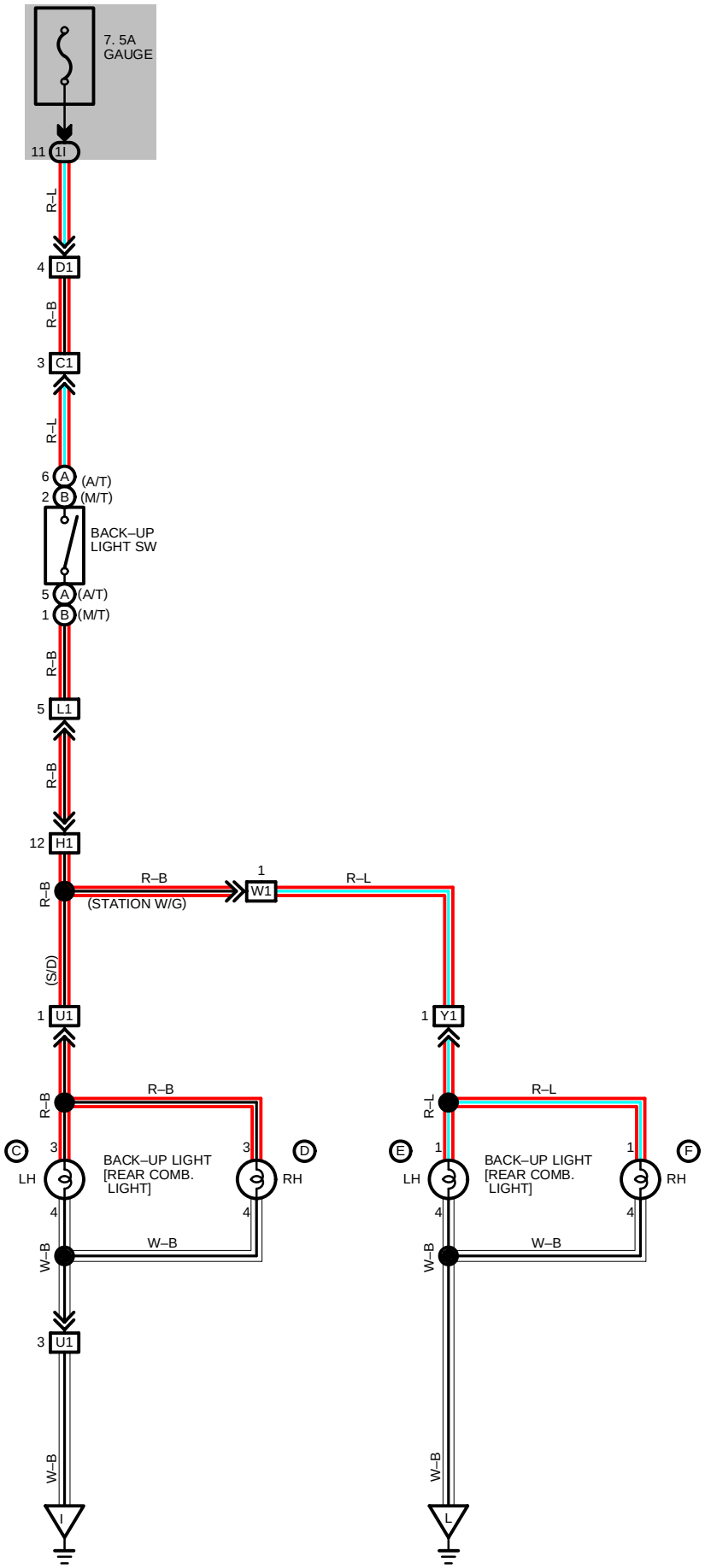

SERVICE HINTS

BACK–UP LIGHT SW

(A) 5–6. **(B)** 1–2 : CLOSED WITH SHIFT LEVER IN **R** POSITION

: PARTS LOCATION

CODE		SEE PAGE	CODE		SEE PAGE	CODE		SEE PAGE
A	N1	24 (2VZ–FE), 25 (3S–FE)	**C**	R12	26 (S/D), 27 (STATION W/G)	**E**	R12	26 (S/D), 27 (STATION W/G)
B	B1	24 (2VZ–FE), 25 (3S–FE)	**D**	R13	26 (S/D), 27 (STATION W/G)	**F**	R13	26 (S/D), 27 (STATION W/G)

: JUNCTION BLOCK AND WIRE HARNESS CONNECTOR

CODE	SEE PAGE	JUNCTION BLOCK AND WIRE HARNESS (CONNECTOR LOCATION)
1I	18	COWL WIRE AND J/B NO. 1 (LEFT KICK PANEL)

: CONNECTOR JOINING WIRE HARNESS AND WIRE HARNESS

CODE	SEE PAGE	JOINING WIRE HARNESS AND WIRE HARNESS (CONNECTOR LOCATION)
C1	30 (2VS–FE)	ENGINE ROOM MAIN WIRE AND ENGINE WIRE (NEAR J/B NO. 2)
	32 (3S–FE)	
D1	30 (2VS–FE)	ENGINE ROOM WIRE AND COWL WIRE (LEFT KICK PANEL)
	32 (3S–FE)	
H1	34	FLOOR NO. 1 WIRE AND INSTRUMENT PANEL WIRE (LEFT KICK PANEL)
L1	34	ENGINE WIRE AND INSTRUMENT PANEL WIRE (BEHIND GLOVE BOX)
U1	36	FLOOR NO. 1 WIRE AND LUGGAGE ROOM NO. 2 WIRE (LUGGAGE COMPARTMENT DOOR)
W1	38	BACK DOOR NO. 1 WIRE AND FLOOR NO. 1 WIRE (BACK PANEL LEFT)
Y1	38	BACK DOOR NO. 1 WIRE AND BACK DOOR NO. 2 WIRE (BACK DOOR LEFT)

: GROUND POINTS

CODE	SEE PAGE	GROUND POINTS LOCATION
I	36	LEFT REAR FENDER
L	38	BACK DOOR RIGHT

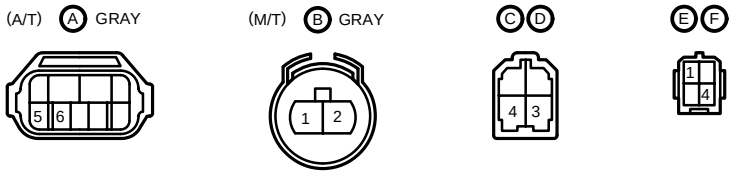

FRONT WIPER AND WASHER

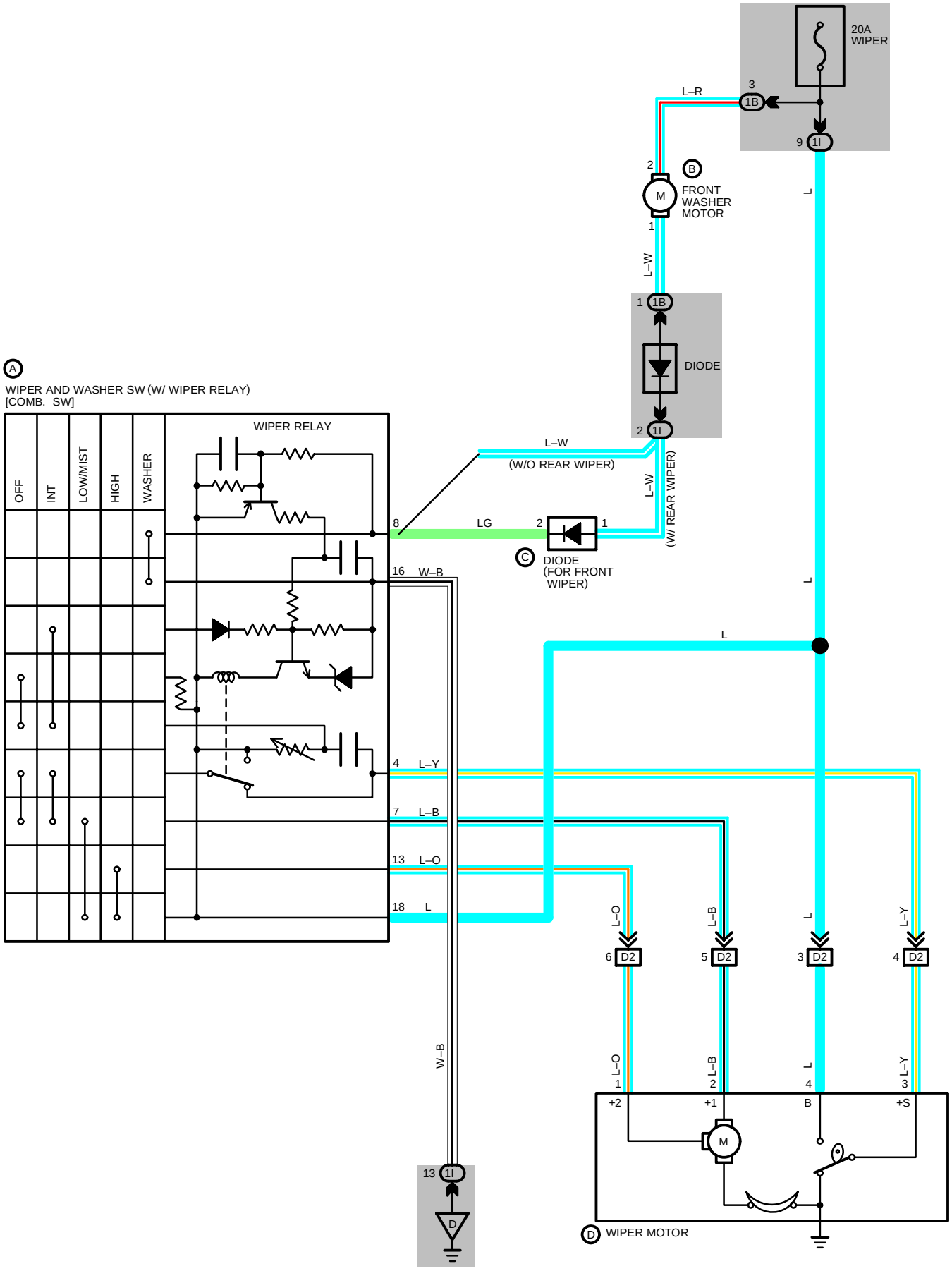

SYSTEM OUTLINE

WITH THE IGNITION SW TURNED ON, THE CURRENT FLOWS TO TERMINAL 18 OF THE WIPER AND WASHER SW, TERMINAL 2 OF THE WASHER MOTOR AND TERMINAL 4 OF THE WIPER MOTOR THROUGH THE WIPER FUSE.

1. LOW SPEED POSITION

WITH WIPER SW TURNED TO LOW POSITION, THE CURRENT FLOWS FROM TERMINAL 18 OF THE WIPER AND WASHER SW → TERMINAL 7 → TERMINAL 2 OF THE WIPER MOTOR → WIPER MOTOR → TO GROUND AND CAUSES TO THE WIPER MOTOR TO RUN AT LOW SPEED.

2. HIGH SPEED POSITION

WITH WIPER SW TURNED TO HIGH POSITION, THE CURRENT FLOWS FROM TERMINAL 18 OF THE WIPER AND WASHER SW → TERMINAL 13 → TERMINAL 1 OF THE WIPER MOTOR → WIPER MOTOR → TO GROUND AND CAUSES TO THE WIPER MOTOR TO RUN AT HIGH SPEED.

3. INT POSITION (W/ INT SW)

WITH WIPER SW TURNED TO INT POSITION, THE RELAY OPERATES AND THE CURRENT WHICH IS CONNECTED BY RELAY FUNCTION FLOWS FROM TERMINAL 18 OF THE WIPER AND WASHER SW → TERMINAL 16 → TO GROUND. THIS FLOW OF CURRENT OPERATES THE INTERMITTENT CIRCUIT AND THE CURRENT FLOWS FROM TERMINAL 18 OF THE WIPER AND WASHER SW → TERMINAL 7 → TERMINAL 2 OF THE WIPER MOTOR → TO GROUND AND THE WIPER FUNCTIONS.

THE INTERMITTENT OPERATION IS CONTROLLED BY A CONDENSER'S CHARGED AND DISCHARGED FUNCTION INSTALLED IN RELAY AND THE INTERMITTENT TIME IS CONTROLLED BY A TIME CONTROL SW TO CHANGE THE CHARGING TIME OF THE CONDENSER.

4. WASHER CONTINUOUS OPERATION (W/ INT CONTROL)

WITH WASHER SW TURNED TO ON, THE CURRENT FLOWS FROM TERMINAL 2 OF THE WASHER MOTOR → TERMINAL 1 → TERMINAL 8 OF THE WIPER AND WASHER SW → TERMINAL 16 → TO GROUND AND CAUSES TO THE WASHER MOTOR TO RUN AND WINDOW WASHER TO JET. THIS CAUSES THE CURRENT TO FLOW TO WASHER CONTINUOUS OPERATION CIRCUIT (W/ INT SW) IN TERMINAL 18 OF THE WIPER AND WASHER SW → TERMINAL 7 → TERMINAL 2 OF THE WIPER MOTOR → TO GROUND AND THE WIPER FUNCTION.

SERVICE HINTS

(A) WIPER AND WASHER SW

16–GROUND : ALWAYS CONTINUITY
18–GROUND : APPROX. **12** VOLTS WITH IGNITION SW AT **ON** POSITION
7–GROUND : APPROX. **12** VOLTS WITH WIPER AND WASHER SW AT **LOW** POSITION
APPROX. **12** VOLTS EVERY **4** SECONDS INTERMITTENTLY WITH WIPER SW AT **INT** POSITION
4–GROUND : APPROX. **12** VOLTS WITH IGNITION SW ON UNLESS WIPER MOTOR AT **STOP** POSITION
13–GROUND : APPROX. **12** VOLTS WITH WIPER AND WASHER SW AT **HIGH** POSITION

(D) WIPER MOTOR

3–4 : CLOSED UNLESS WIPER MOTOR AT **STOP** POSITION

○ : PARTS LOCATION

CODE		SEE PAGE	CODE		SEE PAGE	CODE		SEE PAGE
A	C15	28	**C**	D14	28			
B	F5	24 (2VZ–FE), 25 (3S–FE)	**D**	W2	24 (2VZ–FE), 25 (3S–FE)			

⬭ : JUNCTION BLOCK AND WIRE HARNESS CONNECTOR

CODE	SEE PAGE	JUNCTION BLOCK AND WIRE HARNESS (CONNECTOR LOCATION)
1B	18	ENGINE ROOM MAIN WIRE AND J/B NO. 1 (LEFT KICK PANEL)
1I	18	COWL WIRE AND J/B NO. 1 (LEFT KICK PANEL)

▭ : CONNECTOR JOINING WIRE HARNESS AND WIRE HARNESS

CODE	SEE PAGE	JOINING WIRE HARNESS AND WIRE HARNESS (CONNECTOR LOCATION)
D2	30 (2VZ–FE) 32 (3S–FE)	ENGINE ROOM MAIN WIRE AND COWL WIRE (RIGHT KICK PANEL)

▽ : GROUND POINTS

CODE	SEE PAGE	GROUND POINTS LOCATION
D	34	J/B NO. 1 SET BOLT

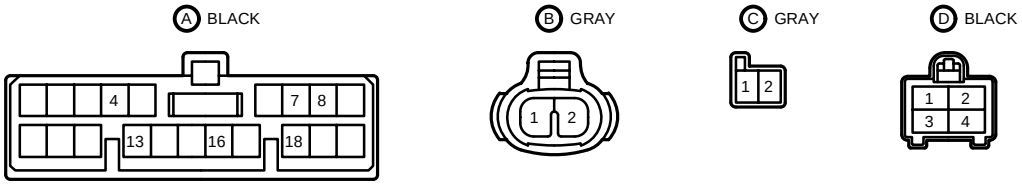

REAR WIPER AND WASHER

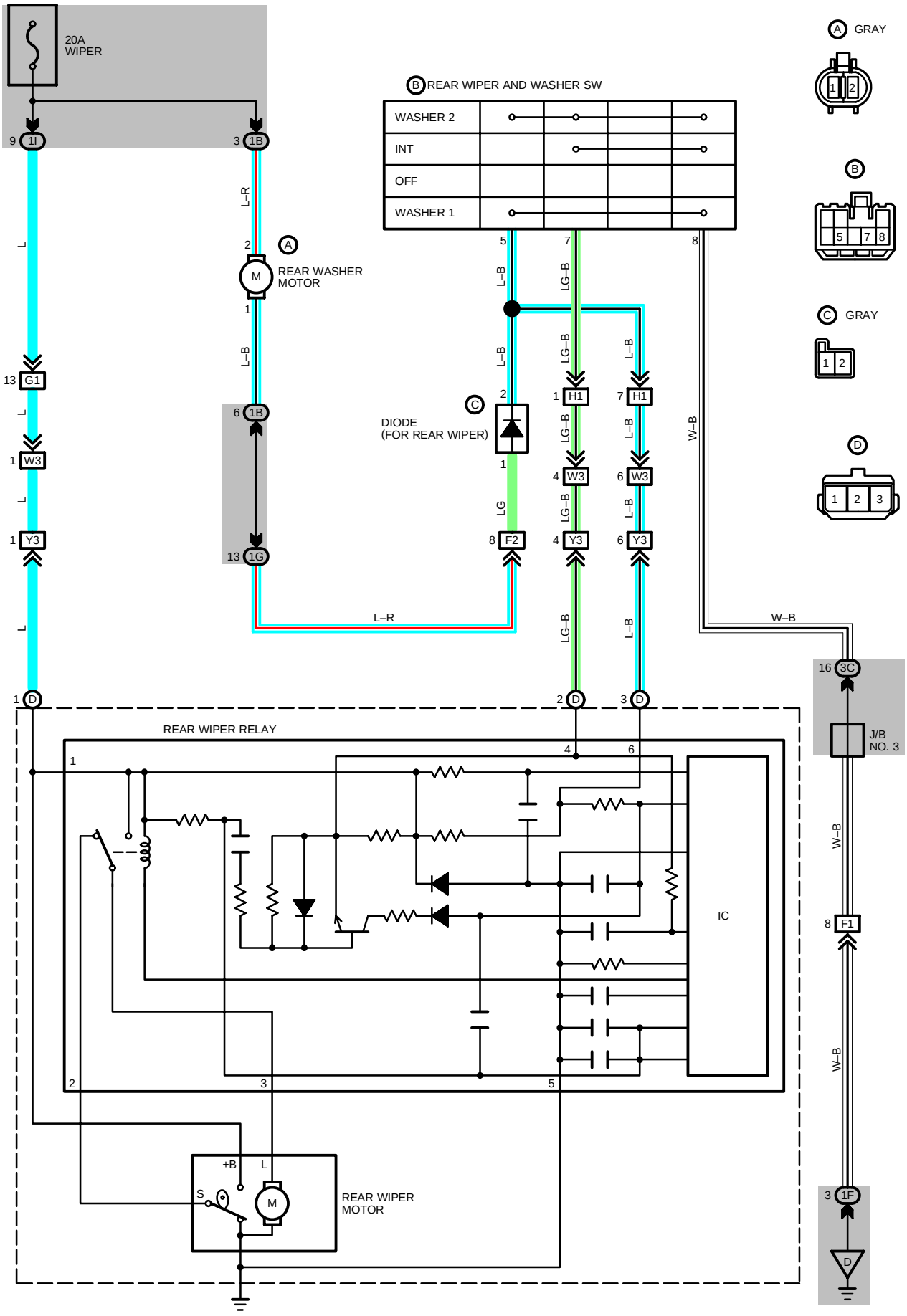

SYSTEM OUTLINE

WHEN THE IGNITION SW IS TURNED ON, CURRENT FLOWS THROUGH THE WIPER FUSE TO TERMINAL 1 OF THE REAR WIPER RELAY, TERMINAL +B OF THE REAR WIPER MOTOR AND TERMINAL 2 OF THE REAR WASHER MOTOR.

1. REAR WIPER OPERATION

WHEN THE IGNITION SW IS ON AND THE REAR WIPER AND WASHER SW IS TURNED TO THE INT POSITION, THE CURRENT FLOWING TO TERMINAL 1 OF THE REAR WIPER RELAY FLOWS TO TERMINAL 4 OF RELAY → TERMINAL 7 OF REAR WIPER AND WASHER SW → TERMINAL 8 → GROUND, CAUSING THE RELAY INTERMITTENT CIRCUIT TO OPERATE SO THAT THE CURRENT FLOWING TO TERMINAL 1 OF THE RELAY FLOWS TO TERMINAL 3 → TERMINAL L OF REAR WIPER MOTOR → GROUND. THIS CAUSES THE WIPER MOTOR TO OPERATE THE WIPER.

2. WASHER OPERATION (WIPER OFF)

WHEN THE WASHER SW IS PUSHED WITH THE IGNITION SW ON AND THE WIPER OFF, THE CURRENT FLOWING TO TERMINAL 2 OF THE REAR WASHER MOTOR FLOWS TO TERMINAL 1 OF THE MOTOR → TERMINAL 5 OF REAR WIPER AND WASHER SW → TERMINAL 8 → GROUND, AND THE WASHER SPRAYS ONLY WHILE THE SW IS PUSHED. THIS CURRENT FLOW CAUSES THE CURRENT FLOWING TO TERMINAL 1 OF REAR WIPER RELAY TO FLOW TO TERMINAL 6 → TERMINAL 5 OF WIPER AND WASHER SW → TERMINAL 8 → GROUND, CAUSING THE CONTINUOUS OPERATION CIRCUIT OF THE RELAY TO OPERATE. ACCORDINGLY, THE CURRENT FLOWING TO TERMINAL 1 OF THE RELAY FLOWS TO TERMINAL 3 OF RELAY → TERMINAL L OF WIPER MOTOR → GROUND, CAUSING THE WIPER TO OPERATE CONTINUOUSLY. THE WIPER CONTINUES TO OPERATE FOR APPROX. 3 SECS. AFTER THE WASHER SW IS TURNED OFF.

3. WASHER OPERATION (WIPER ON)

WHEN THE WIPER AND WASHER SW IS PUSHED MORE STRONGLY DURING WIPER OPERATION, THE CURRENT FLOWING TO TERMINAL 2 OF THE WASHER MOTOR FLOWS TO TERMINAL 1 → TERMINAL 5 OF WIPER AND WASHER SW → TERMINAL 8 → GROUND, SO THE WASHER SPRAYS ONLY WHILE THE SW IS PRESSED. THIS CURRENT FLOW CAUSES THE CURRENT FLOWING TO TERMINAL 1 OF RELAY TO FLOW TO TERMINAL 6 → TERMINAL 5 OF WIPER AND WASHER SW → TERMINAL 8 → GROUND, CAUSING THE CONTINUOUS OPERATION SWITCH OF THE RELAY TO OPERATE. THE CURRENT FLOWING TO TERMINAL 1 OF RELAY THEN FLOWS TO TERMINAL 3 OF RELAY → TERMINAL L OF WIPER MOTOR → GROUND, CAUSING THE WIPER TO OPERATE CONTINUOUSLY. THE WIPER CONTINUES TO OPERATE FOR APPROX. 3 SECS. AFTER THE WASHER SW IS TURNED OFF.

SERVICE HINTS

(A) REAR WASHER MOTOR

2–GROUND : APPROX. **12** VOLTS WITH IGNITION SW AT **ON** POSITION
1–GROUND : CONTINUITY WITH WASHER SW TURNED ON

REAR WIPER RELAY

1–GROUND : APPROX. **12** VOLTS WITH IGNITION SW AT **ON** POSITION
5–GROUND : ALWAYS CONTINUITY
1–3 : POINTS CHANGES EVERY **12** SECONDS INTERMITTENTLY WITH IGNTION SW **ON** AND WIPER SW AT **INT** POSITION

○ : PARTS LOCATION

CODE		SEE PAGE	CODE		SEE PAGE	CODE		SEE PAGE
A	R3	24 (2VZ–FE), 25 (3S–FE)	**C**	D15	28			
B	R7	28	**D**	R20	27			

⬭ : JUNCTION BLOCK AND WIRE HARNESS CONNECTOR

CODE	SEE PAGE	JUNCTION BLOCK AND WIRE HARNESS (CONNECTOR LOCATION)
1B	18	ENGINE ROOM MAIN WIRE AND J/B NO. 1 (LEFT KICK PANEL)
1F	18	COWL SUB WIRE AND J/B NO. 1 (LEFT KICK PANEL)
1G		
1I	18	COWL WIRE AND J/B NO. 1 (LEFT KICK PANEL)
3C	22	INSTRUMENT PANEL WIRE AND J/B NO. 3 (INSTRUMENT PANEL LEFT)

▭ : CONNECTOR JOINING WIRE HARNESS AND WIRE HARNESS

CODE	SEE PAGE	JOINING WIRE HARNESS AND WIRE HARNESS (CONNECTOR LOCATION)
F1	34	INSTRUMENT PANEL WIRE AND COWL SUB WIRE (LEFT KICK PANEL)
F2		
G1	34	FLOOR NO. 1 WIRE AND COWL WIRE (LEFT KICK PANEL)
H1	34	FLOOR NO. 1 WIRE AND INSTRUMENT PANEL WIRE (LEFT KICK PANEL)
W3	38	BACK DOOR NO. 1 WIRE AND FLOOR NO. 1 WIRE (BACK PANEL LEFT)
Y3	38	BACK DOOR NO. 1 WIRE AND BACK DOOR NO. 2 WIRE (BACK DOOR LEFT)

▽ : GROUND POINTS

CODE	SEE PAGE	GROUND POINTS LOCATION
D	34	J/B NO. 1 SET BOLT

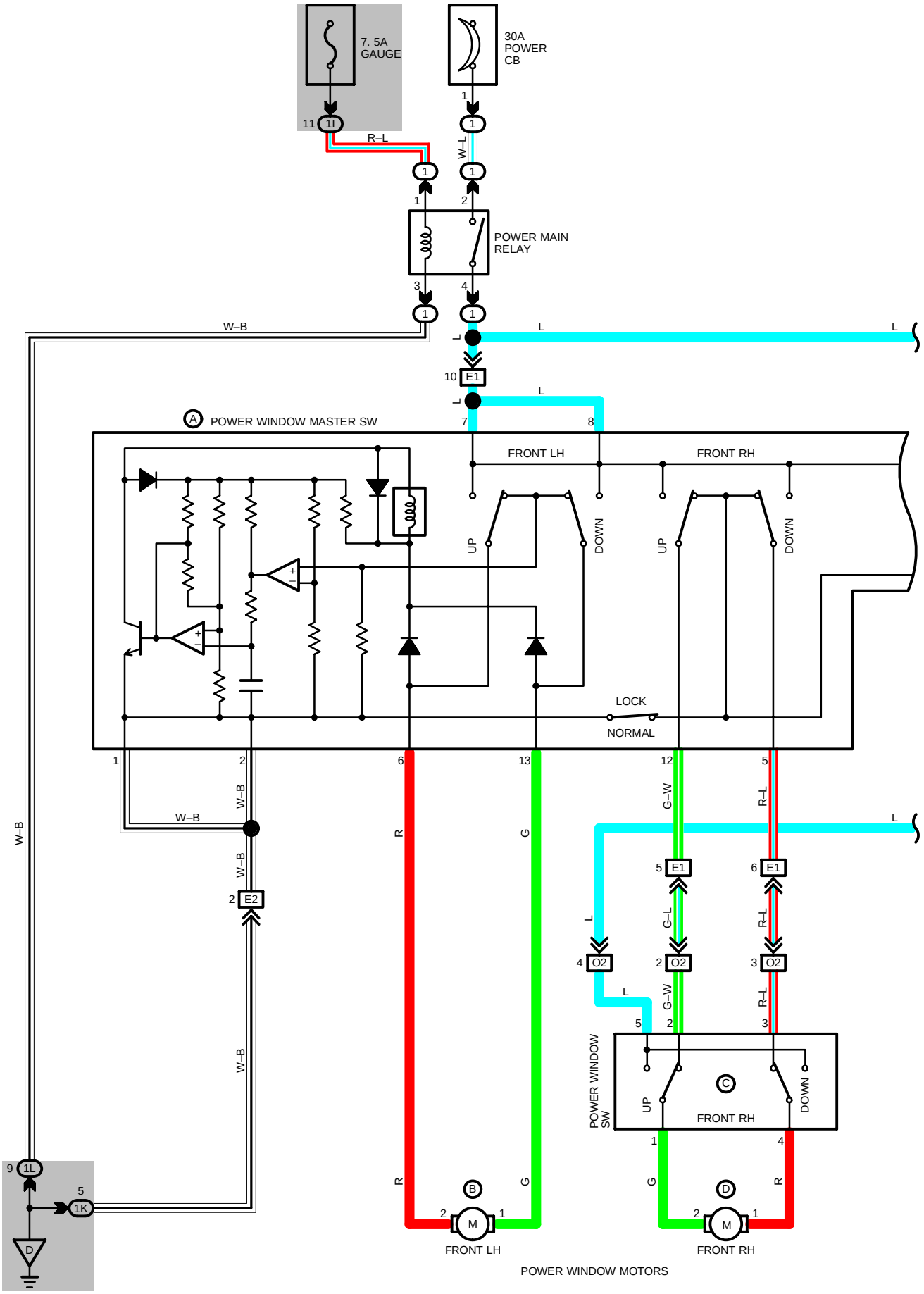
7. 5A
GAUGE
30A
POWER
CB
POWER MAIN
RELAY
W–B
R–L
W–L
L
E1
E2
O2
A
POWER WINDOW MASTER SW
FRONT LH
FRONT RH
UP
DOWN
LOCK
NORMAL
G–W
G–L
R–L
R
G
B
C
D
M
POWER WINDOW
SW
FRONT LH
FRONT RH
POWER WINDOW MOTORS

SERVICE HINTS

(A) POWER WINDOW MASTER SW

7, 8–GROUND: APPROX. **12** VOLTS WITH IGNITION SW AT **ON** POSITION
2–GROUND : ALWAYS CONTINUITY
6–GROUND : APPROX. **12** VOLTS WITH IGNITION SW ON AND MASTER SW (DRIVER'S WINDOW) UP
13–GROUND : APPROX. **12** VOLTS WITH IGNITION SW ON AND MASTER SW (DRIVER'S WINDOW) DOWN OR DOWN HOLD

WINDOW LOCK SW

OPEN WITH WINDOW LOCK SW AT **LOCK** POSITION

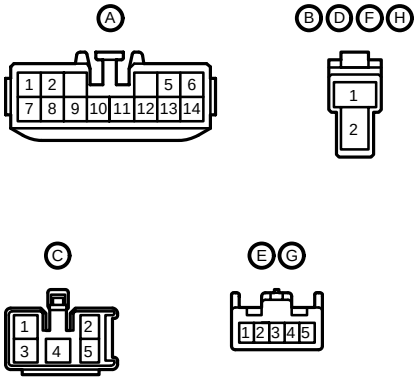

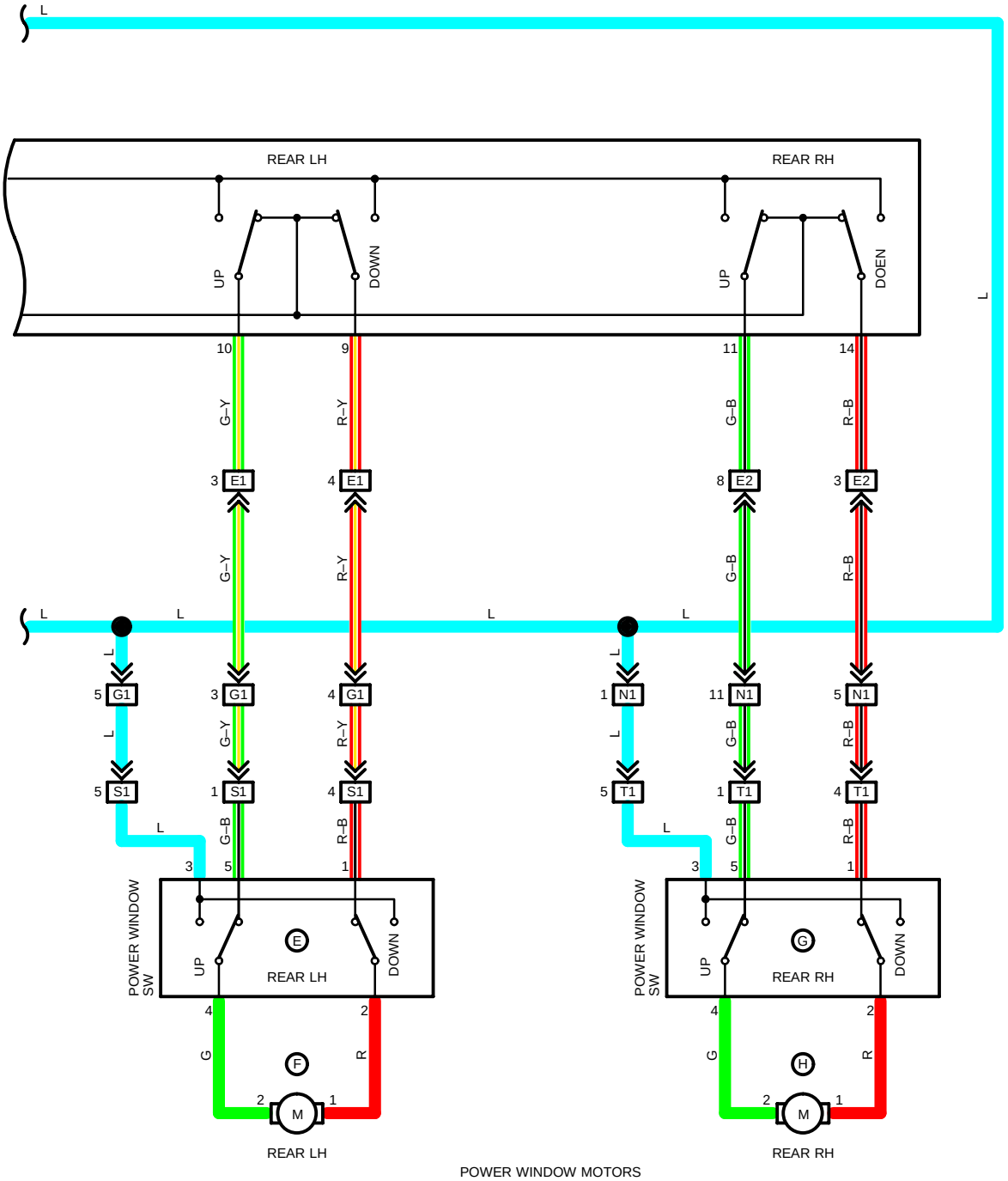

POWER WINDOW MOTORS

POWER WINDOW

SYSTEM OUTLINE

WITH THE IGNITION SW TURNED ON, CURRENT FLOWS THROUGH THE GAUGE FUSE TO TERMINAL 1 OF THE POWER MAIN RELAY → TERMINAL 3 → TO GROUND. THIS ACTIVATES THE RELAY AND THE CURRENT FLOWING TO TERMINAL 2 OF THE RELAY FROM POWER CB FLOWS TO TERMINAL 4 OF THE RELAY → TERMINAL 7 OR 8 OF THE POWER WINDOW MASTER SW → TO TERMINAL 5 (PASSENGER'S) AND TERMINAL 3 (REAR LH, RH) OF THE POWER WINDOW SW.

1. MANUAL UP OPERATION (DRIVER'S WINDOW)

WITH THE IGNITION SW TURNED ON AND WITH THE POWER WINDOW MASTER SW (MANUAL SW) IN UP POSITION, THE CURRENT FLOWING TO TERMINAL 7 OR 8 OF THE POWER WINDOW MASTER SW FLOWS TO TERMINAL 6 OF THE MASTER SW → TERMINAL 2 OF THE POWER WINDOW MOTOR → TERMINAL 1 → TERMINAL 13 OF THE MASTER SW → TERMINAL 2 OR 1 → TO GROUND AND CAUSES THE POWER WINDOW MOTOR TO ROTATE IN THE UP DIRECTION. THE WINDOW ASCENDS ONLY WHILE THE SW IS BEING PUSHED. IN DOWN OPERATION, THE FLOW OF CURRENT FROM TERMINAL 7 OR 8 OF THE POWER WINDOW MASTER SW TO TERMINAL 13 OF THE MASTER SW CAUSES THE FLOW OF CURRENT FROM TERMINAL 1 OF THE MOTOR → TERMINAL 2 → TERMINAL 6 OF THE MASTER SW → TERMINALS 2 OR 1 → TO GROUND, → FLOWING IN THE OPPOSITE DIRECTION TO MANUAL UP OPERATION AND CAUSING THE MOTOR TO ROTATE IN REVERSE, LOWERING THE WINDOW.

2. AUTO DOWN OPERATION

WITH THE IGNITION SW ON AND WITH THE AUTO SW OF THE POWER WINDOW MASTER SW IN DOWN POSITION, CURRENT FLOWING TO TERMINAL 7 OR 8 OF THE MASTER SW FLOWS TO TERMINAL 13 OF THE MASTER SW → TERMINAL 1 OF THE POWER WINDOW MOTOR → TERMINAL 2 → TERMINAL 6 OF THE MASTER SW → TERMINAL 2 → TO GROUND, CAUSING THE MOTOR TO ROTATE TOWARDS THE DOWN SIDE. THEN THE SOLENOID IN THE MASTER SW IS ACTIVATED AND IT LOCKS THE AUTO SW BEING PUSHED, CAUSING THE MOTOR TO CONTINUE TO ROTATE IN AUTO DOWN OPERATION. WHEN THE WINDOW HAS COMPLETELY DESCENDED, THE CURRENT FLOW BETWEEN TERMINAL 6 OF THE MASTER SW AND TERMINAL 2 INCREASES. AS A RESULT, THE SOLENOID STOPS OPERATING, THE AUTO SW TURNS OFF AND FLOW FROM TERMINAL 7 OF THE MASTER SW TO TERMINAL 13 IS CUT OFF, STOPPING THE MOTOR SO THAT AUTO STOP OCCURS.

3. STOPPING OF AUTO DOWN AT DRIVER'S WINDOW

WHEN THE MANUAL SW (DRIVER'S) IS PUSHED TO THE UP SIDE DURING AUTO DOWN OPERATION, A GROUND CIRCUIT OPENS IN THE MASTER SW AND CURRENT DOES NOT FLOW FROM TERMINAL 6 OF THE MASTER SW → TO GROUND SO THE MOTOR STOPS, CAUSING AUTO DOWN OPERATION TO STOP. IF THE MASTER SW IS PUSHED CONTINUOUSLY, THE MOTOR ROTATES IN THE UP DIRECTION IN MANUAL UP OPERATION.

4. MANUAL OPERATION BY POWER WINDOW SW (PASSENGER'S WINDOW)

WITH POWER WINDOW SW (PASSENGER'S) PULLED TO THE UP SIDE, CURRENT FLOWING FROM TERMINAL 5 OF THE POWER WINDOW SW FLOWS TO TERMINAL 1 OF THE POWER WINDOW SW → TERMINAL 2 OF THE POWER WINDOW MOTOR → TERMINAL 1 → TERMINAL 4 OF THE POWER WINDOW SW → TERMINAL 3 → TERMINAL 5 OF THE MASTER SW → TERMINALS 1 OR 2 → TO GROUND AND CAUSES THE POWER WINDOW MOTOR (PASSENGER'S) TO ROTATE IN THE UP DIRECTION. UP OPERATION CONTINUES ONLY WHILE THE POWER WINDOW SW IS PULLED TO THE UP SIDE. WHEN THE WINDOW DESCENDS, THE CURRENT FLOWING TO THE MOTOR FLOWS IN THE OPPOSITE DIRECTION, FROM TERMINAL 1 TO TERMINAL 2, AND THE MOTOR ROTATES IN REVERSE. WHEN THE WINDOW LOCK SW IS PUSHED TO THE LOCK SIDE, THE GROUND CIRCUIT TO THE PASSENGER'S WINDOW BECOMES OPEN. AS A RESULT, EVEN IF OPEN/CLOSE OPERATION OF THE PASSENGER'S WINDOW IS TRIED, THE CURRENT FROM TERMINAL 1 AND 2 OF THE POWER WINDOW MASTER SW IS NOT GROUNDED AND THE MOTOR DOES NOT ROTATE, SO THE PASSENGER'S WINDOW CAN NOT BE OPERATED AND WINDOW LOCK OCCURS. FURTHERMORE REAR LH RH WINDOW OPERATE THE SAME AS THE ABOVE CIRCUIT.

○ : PARTS LOCATION

CODE		SEE PAGE	CODE		SEE PAGE	CODE		SEE PAGE
A	P6	26 (S/D), 27 (STATION W/G)	**D**	P8	26 (S/D), 27 (STATION W/G)	**G**	P13	26 (S/D), 27 (STATION W/G)
B	P7	26 (S/D), 27 (STATION W/G)	**E**	P12	26 (S/D), 27 (STATION W/G)	**H**	P10	26 (S/D), 27 (STATION W/G)
C	P11	26 (S/D), 27 (STATION W/G)	**F**	P9	26 (S/D), 27 (STATION W/G)			

▭ : RELAY BLOCKS

CODE	SEE PAGE	RELAY BLOCKS (RELAY BLOCK LOCATION)
1	23	R/B NO. 1 (LEFT KICK PANEL)

▭ : JUNCTION BLOCK AND WIRE HARNESS CONNECTOR

CODE	SEE PAGE	JUNCTION BLOCK AND WIRE HARNESS (CONNECTOR LOCATION)
1I	18	COWL WIRE AND J/B NO. 1 (LEFT KICK PANEL)
1K		
1L		

▭ : CONNECTOR JOINING WIRE HARNESS AND WIRE HARNESS

CODE	SEE PAGE	JOINING WIRE HARNESS AND WIRE HARNESS (CONNECTOR LOCATION)
E1	34	FRONT DOOR LH WIRE AND COWL WIRE (LEFT KICK PANEL)
E2		
G1	34	FLOOR NO. 1 WIRE AND COWL WIRE (LEFT KICK PANEL)
N1	34	FLOOR NO. 2 WIRE AND COWL WIRE (RIGHT KICK PANEL)
O2	34	FRONT DOOR RH WIRE AND COWL WIRE (RIGHT KICK PANEL)
S1	36 (S/D)	REAR DOOR WIRE LH AND FLOOR NO. 1 WIRE (LEFT CENTER PILLAR)
	38 (STATION W/G)	
T1	36 (S/D)	REAR DOOR WIRE RH AND FLOOR NO. 2 WIRE (RIGHT CENTER PILLAR)
	38 (STATION W/G)	

▽ : GROUND POINTS

CODE	SEE PAGE	GROUND POINTS LOCATION
D	34	J/B NO. 1 SET BOLT

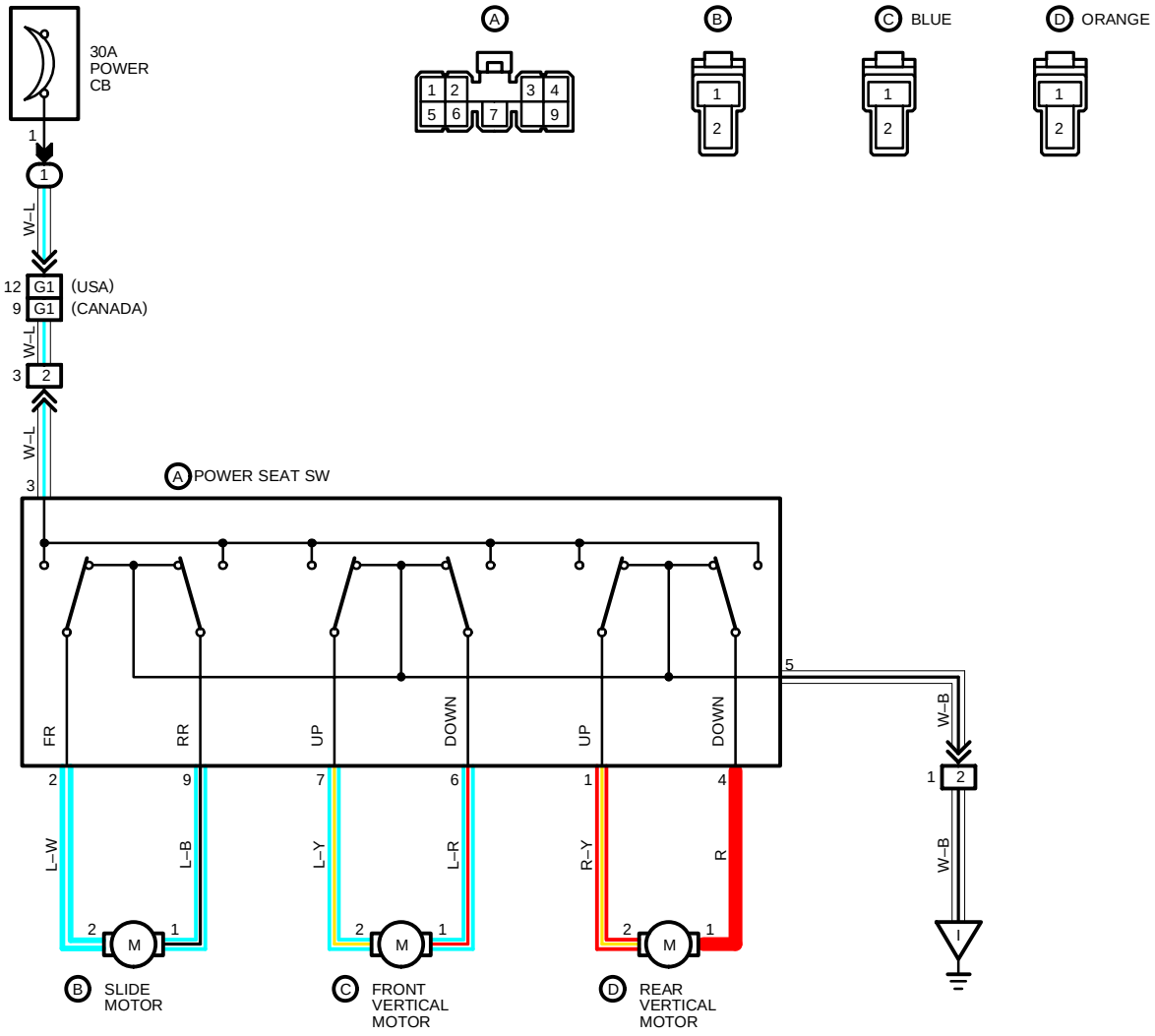

SERVICE HINTS

(A) POWER SEAT SW

3–GROUND : APPROX. **12** VOLTS WITH IGNITION SW AT **ON** OR **ACC** POSITION

5–GROUND : ALWAYS CONTINUITY

: PARTS LOCATION

CODE		SEE PAGE	CODE		SEE PAGE	CODE		SEE PAGE
A	P5	28	**C**	P2	28			
B	P4	28	**D**	P3	28			

: RELAY BLOCKS

CODE	SEE PAGE	RELAY BLOCKS (RELAY BLOCK LOCATION)
1	23	R/B NO. 1 (LEFT KICK PANEL)

: CONNECTOR JOINING WIRE HARNESS AND WIRE HARNESS

CODE	SEE PAGE	JOINING WIRE HARNESS AND WIRE HARNESS (CONNECTOR LOCATION)
G1	34	FLOOR NO. 1 WIRE AND COWL WIRE (LEFT KICK PANEL)
a2	34	FLOOR NO. 1 WIRE AND SEAT WIRE (UNDER DRIVER'S SEAT)

: GROUND POINTS

CODE	SEE PAGE	GROUND POINTS LOCATION
I	36	LEFT REAR FENDER

DOOR LOCKS

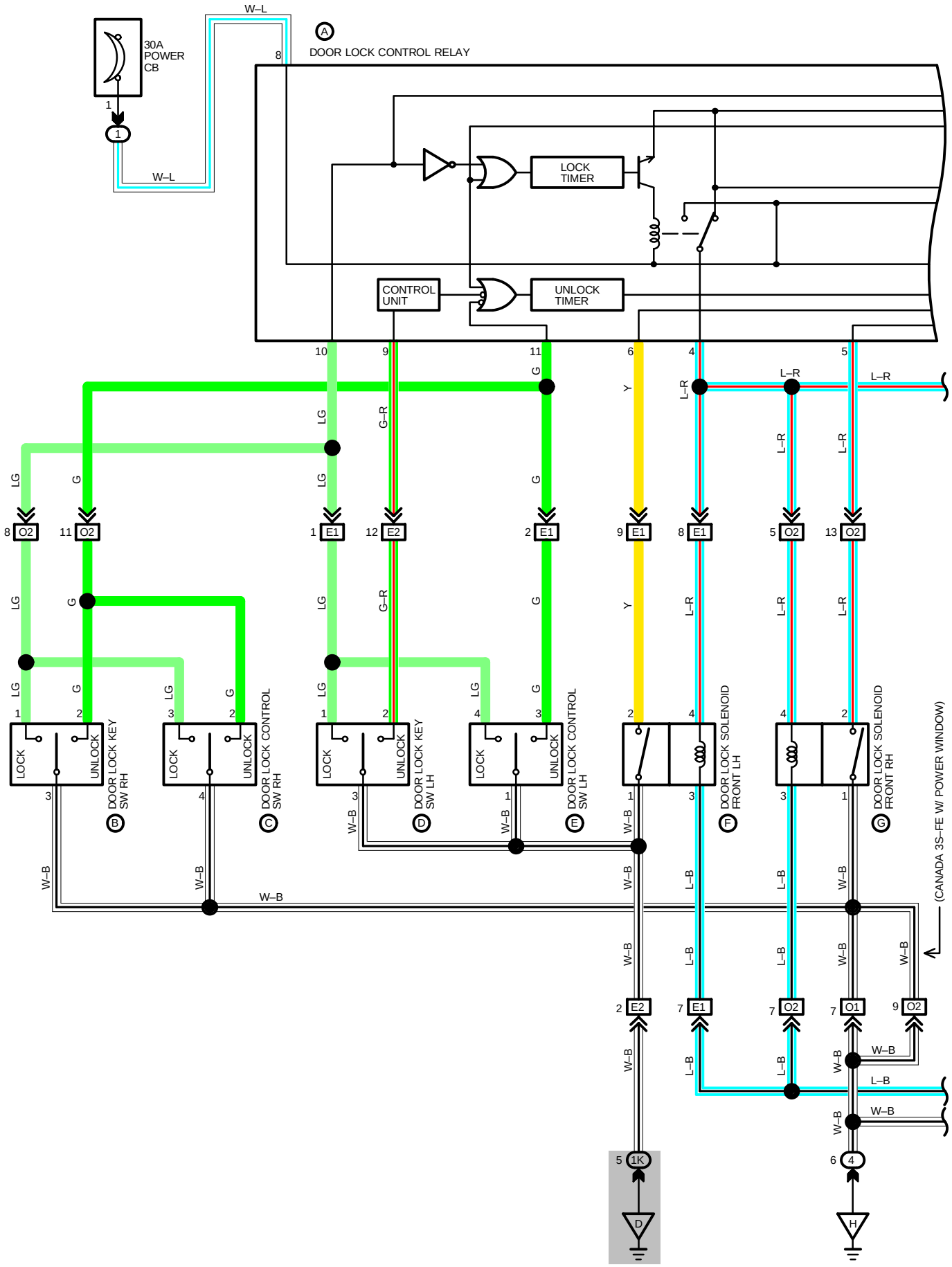
30A
POWER
CB
W–L
A
DOOR LOCK CONTROL RELAY
LOCK
TIMER
CONTROL
UNIT
UNLOCK
TIMER
DOOR LOCK KEY
SW RH
DOOR LOCK CONTROL
SW RH
DOOR LOCK KEY
SW LH
DOOR LOCK CONTROL
SW LH
DOOR LOCK SOLENOID
FRONT LH
DOOR LOCK SOLENOID
FRONT RH
(CANADA 3S–FE W/ POWER WINDOW)
LOCK
UNLOCK
W–B
L–B
L–R
G–R
LG
G
Y

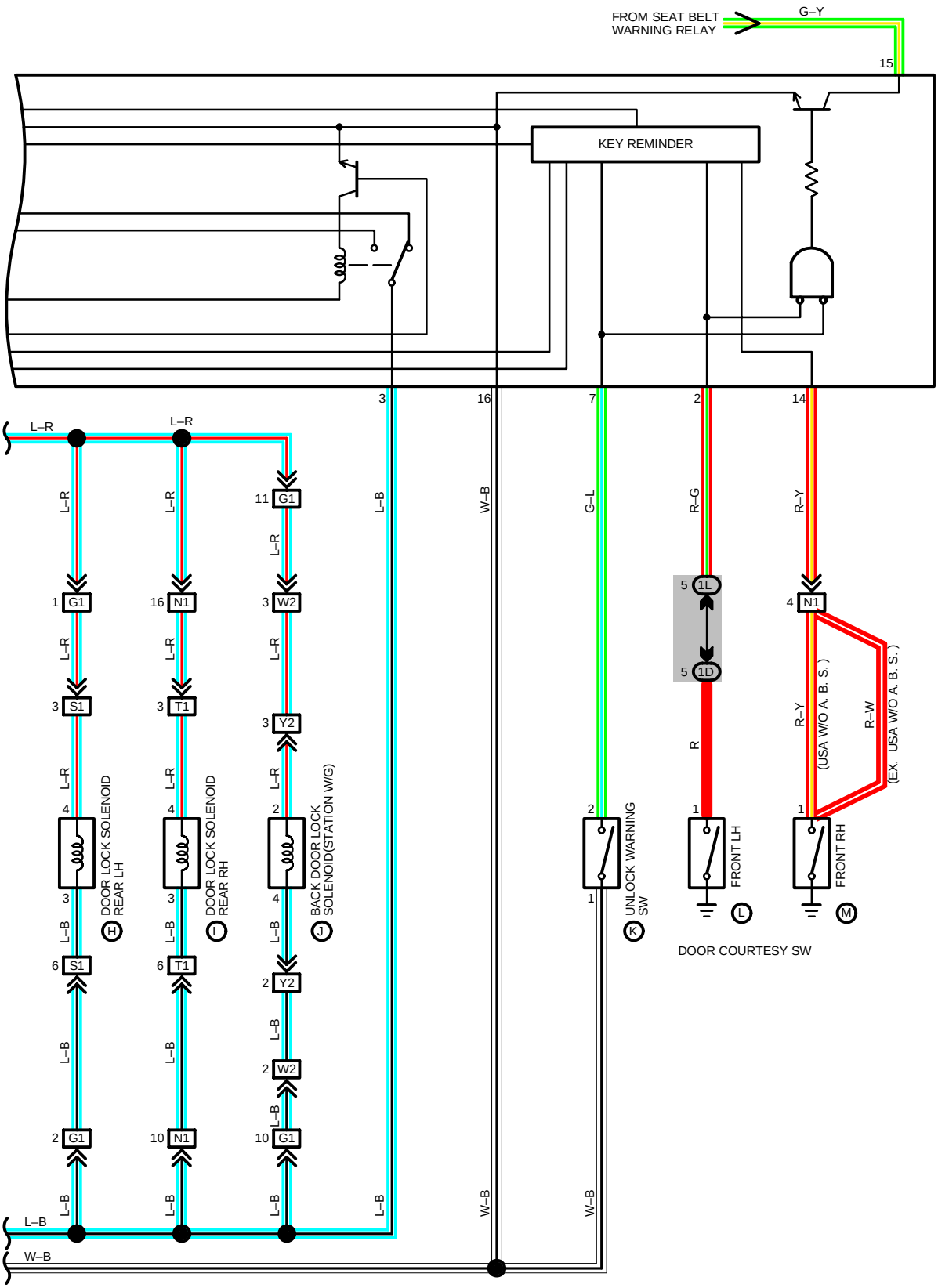
FROM SEAT BELT WARNING RELAY
G–Y
15
KEY REMINDER
3
16
7
2
14
L–R
L–B
W–B
G–L
R–G
R–Y
R
R–W
11 G1
1 G1
16 N1
3 W2
3 S1
3 T1
3 Y2
4
2
6 S1
6 T1
2 Y2
2 W2
2 G1
10 N1
10 G1
DOOR LOCK SOLENOID REAR LH
H
DOOR LOCK SOLENOID REAR RH
I
BACK DOOR LOCK SOLENOID(STATION W/G)
J
UNLOCK WARNING SW
K
5 1L
5 1D
1
FRONT LH
L
4 N1
FRONT RH
M
(USA W/O A. B. S.)
(EX. USA W/O A. B. S.)
DOOR COURTESY SW

DOOR LOCKS

SYSTEM OUTLINE

CURRENT ALWAYS FLOWS TO TERMINAL 8 OF THE DOOR LOCK CONTROL RELAY THROUGH POWER CB.

1. MANUAL LOCK OPERATION

TO PUSH DOOR LOCK SW AND KEY SW TO LOCK POSITION, A LOCK SIGNAL IS INPUT TO TERMINAL 10 OF THE DOOR LOCK CONTROL RELAY AND CAUSES THE RELAY TO FUNCTION. CURRENT FLOWS FROM TERMINAL 8 OF THE RELAY → TERMINAL 4 → TERMINAL 4 OF THE DOOR LOCK SOLENOIDS, TERMINAL 2 OF THE BACK DOOR LOCK SOLENOID (W/G) → TERMINAL 3, TERMINAL 4 (W/G) → TERMINAL 3 OF THE RELAY → TERMINAL 16 → TO GROUND AND DOOR LOCK SOLENOID CAUSES THE DOOR TO LOCK.

2. MANUAL UNLOCK OPERATION

TO PUSH DOOR LOCK CONTROL SW AND KEY SW TO UNLOCK POSITION, AN UNLOCK SIGNAL IS INPUT TO TERMINAL 9 (DOOR LOCK KEY SW LH), TERMINAL 11 (EX. DOOR LOCK KEY SW LH 2 STEP UNLOCK FUNCTION) OF THE DOOR CONTROL RELAY AND CAUSES THE RELAY TO FUNCTION. CURRENT FLOWS FROM TERMINAL 8 OF THE RELAY → TERMINAL 3 → TERMINAL 3 OF THE DOOR LOCK SOLENOIDS, TERMINAL 4 OF THE BACK DOOR LOCK SOLENOID (W/G) → TERMINAL 4, TEMRINAL 2 (W/G) → TERMINAL 4 OF THE RELAY → TERMINAL 16 → TO GROUND AND DOOR LOCK SOLENOID CAUSES DOOR TO UNLOCK.

3. IGNITION KEY REMINDER OPERATION

***** OPERATING DOOR LOCK KNOB (IN DOOR LOCK SOLENOIDS OPERATION)

WITH IGNITION KEY IN CYLINDER (UNLOCK WARNING SW ON), WHEN THE DOOR IS OPENED AND LOCKED USING DOOR LOCK KNOB (DOOR LOCK SOLENOID), THE DOOR IS LOCKED ONCE BUT EACH DOOR IS UNLOCKED SOON BY THE FUNCTION OF RELAY. AS A RESULT, THE CURRENT FLOWS FROM TERMINAL 8 OF THE RELAY → TERMINAL 3 → TERMINAL 3 OF THE DOOR LOCK SOLENOIDS, TERMINAL 4 OF THE BACK DOOR LOCK SOLENOID (W/G) → TERMINAL 4, TERMINAL 2 (W/G) → TERMINAL 4 OF THE RELAY → TERMINAL 16 → TO GROUND AND CAUSES ALL THE DOORS TO UNLOCK.

***** OPERATING DOOR LOCK CONTROL SW OR DOOR LOCK KEY SW

WITH IGNITION KEY IN CYLINDER (UNLOCK WARNING SW ON), WHEN THE DOOR IS OPENED AND LOCKED USING DOOR LOCK CONTROL SW OR KEY SW, THE DOOR IS LOCKED ONCE BUT EACH DOOR IS UNLOCK BY THE FUNCTION OF SW CONTAINED IN SOLENOIDS, WHICH THE SIGNAL IS INPUT TO TERMINAL 9 OF THE RELAY. ACCORDING TO THIS INPUT SIGNAL, THE CURRENT IN RELAY FLOWS FROM TERMINAL 8 OF THE RELAY → TERMINAL 3 → TERMINAL 3 OF THE DOOR LOCK SOLENOIDS, TERMINAL 4 OF THE BACK DOOR LOCK SOLENOID (W/G) → TERMINAL 4, TERMINAL 2 (W/G) → TERMINAL 4 OF THE RELAY → TERMINAL 16 → TO GROUND AND CAUSES ALL THE DOOR TO UNLOCK.

***** IN CASE OF KEY LESS LOCK

WITH IGNITION KEY IN CYLINDER (UNLOCK WARNING SW ON), WHEN THE UNLOCK FUNCTION IS DISTURBED MORE THAN 0.2 SECONDS, FOR EXAMPLE PUSHING THE DOOR LOCK KNOB ETC., THE DOOR HOLDS ON LOCK CONDITION. CLOSING THE DOOR AFTER, DOOR COURTESY SW INPUTS THE SIGNAL INTO RELAY. BY THIS INPUT SIGNAL, THE RELAY WORKS AND CURRENT FLOWS FROM TERMINAL 8 OF THE RELAY → TERMINAL 3 → TERMINAL 3 OF THE DOOR LOCK SOLENOIDS, TERMINAL 4 OF THE BACK DOOR LOCK SOLENOID (W/G) → TERMINAL 4, TERMINAL 2 (W/G) → TERMINAL 4 OF THE RELAY → TERMINAL 16 → TO GROUND AND CAUSES ALL THE DOORS TO UNLOCK.

SERVICE HINTS

(A) DOOR LOCK CONTROL RELAY

2–GROUND : CONTINTUITY WITH DRIVER'S DOOR OPEN
8–GROUND : ALWAYS APPROX. **12** VOLTS
16–GROUND : ALWAYS CONTINTUITY
4–GROUND : APPROX. **12** VOLTS **0.2** SECONDS WITH FOLLOWING OPERATION
DOOR LOCK CONTROL SW LOCKED
LOCKING THE DRIVER'S, PASSENGER'S DOOR CYLINDER WITH KEY
3–GROUND : APPROX. **12** VOLTS **0.2** SECONDS WITH FOLLOWING OPERATION
DOOR LOCK CONTROL SW UNLOCKED
DOOR LOCK CONTROL SW LOCKED WITH IGNITION KEY IN CYLINDER AND DRIVER'S DOOR OPEN (IGNITION KEY REMINDER FUNCTION)
DOOR LOCK KNOB LOCKED WITH IGNITION KEY IN CYLINDER AND DRIVER'S DOOR OPEN (IGNITION KEY REMINDER FUNCTION)
UNLOCKING THE DRIVER'S, PASSENGER'S DOOR CYLINDER WITH KEY
10–GROUND : **0** VOLT WITH DOOR LOCK CONTROL SW LOCKED OR DRIVER'S, PASSENGER'S DOOR LOCK CYLINDER LOCKED WITH KEY
14–GROUND : CONTINUITY WITH PASSENGER'S DOOR OPEN
6–GROUND : **12** VOLTS WITH DRIVER'S DOOR LOCK KNOB UNLOCKED
5–GROUND : CONTINUITY WITH PASSENGER'S DOOR LOCK KNOB UNLOCKED
7–GROUND : CONTINUITY WITH IGNITION KEY IN CYLINDER
9–GROUND : **0** VOLT WITH DRIVER'S DOOR LOCK CYLINDER UNLOCKED WITH KEY
11–GROUND : **0** VOLT WITH DOOR LOCK CONTROL SW UNLOCKED OR PASSENGER'S DOOR LOCK CYLINDER UNLOCKED WITH KEY

(B) (D) DOOR LOCK KEY SW

2–3 : CLOSED WITH DOOR LOCK CYLINDER LOCKED WITH KEY
1–2 : CLOSED WITH DOOR LOCK CYLINDER UNLOCKED WITH KEY

(F) (G) DOOR LOCK SOLENOID

1–2 : CLOSED WITH UNLOCK POSITION

(K) UNLOCK WARNING SW

1–2 : CLOSED WITH IGNITION KEY IN CYLINDER

(L) (M) DOOR COURTESY SW

1–GROUND : CLOSED WITH DOOR OPEN

: PARTS LOCATION

CODE		SEE PAGE	CODE		SEE PAGE	CODE		SEE PAGE
A	D16	28	**F**	D29	26 (S/D), 27 (STATION W/G)	**K**	U1	28
B	D28	26 (S/D), 27 (STATION W/G)	**G**	D30	26 (S/D), 27 (STATION W/G)	**L**	D19	26 (S/D), 27 (STATION W/G)
C	D26	26 (S/D), 27 (STATION W/G)	**H**	D31	26 (S/D), 27 (STATION W/G)	**M**	D20	26 (S/D), 27 (STATION W/G)
D	D27	26 (S/D), 27 (STATION W/G)	**I**	D32	26 (S/D), 27 (STATION W/G)	**N**	D21	26 (S/D), 27 (STATION W/G)
E	P6	26 (S/D), 27 (STATION W/G)	**J**	B9	27			

: RELAY BLOCKS

CODE	SEE PAGE	RELAY BLOCKS (RELAY BLOCK LOCATION)
1	21	R/B NO. 1 (LEFT KICK PANEL)
4	21	R/B NO. 4 (RIGHT KICK PANEL)

: JUNCTION BLOCK AND WIRE HARNESS CONNECTOR

CODE	SEE PAGE	JUNCTION BLOCK AND WIRE HARNESS (CONNECTOR LOCATION)
1D	16	FLOOR WIRE AND J/B NO. 1 (LEFT KICK PANEL)
1K	16	COWL WIRE AND J/B NO. 1 (LEFT KICK PANEL)
1L		

: CONNECTOR JOINING WIRE HARNESS AND WIRE HARNESS

CODE	SEE PAGE	JOINING WIRE HARNESS AND WIRE HARNESS (CONNECTOR LOCATION)
E1	34	FRONT DOOR LH WIRE AND COWL WIRE (LEFT KICK PANEL)
E2		
G1	34	FLOOR NO. 1 WIRE AND COWL WIRE (LEFT KICK PANEL)
N1	34	FLOOR NO. 2 WIRE AND COWL WIRE (RIGHT KICK PANEL)
O1	34	FRONT DOOR RH WIRE AND COWL WIRE (RIGHT KICK PANEL)
O2		
S1	36 (S/D)	REAR DOOR WIRE LH AND FLOOR NO. 1 WIRE (LEFT CENTER PILLAR)
	38 (STATION W/G)	
T1	36 (S/D)	REAR DOOR WIRE RH AND FLOOR NO. 2 WIRE (RIGHT CENTER PILLAR)
	38 (STATION W/G)	
W2	38	BACK DOOR NO. 1 WIRE AND FLOOR NO. 1 WIRE (BACK PANEL LEFT)
Y2	38	BACK DOOR NO. 1 WIRE AND BACK DOOR NO. 2 WIRE (BACK DOOR LEFT)

: GROUND POINTS

CODE	SEE PAGE	GROUND POINTS LOCATION
D	34	J/B NO. 1 SET BOLT
H	34	R/B NO. 4 SET BOLT

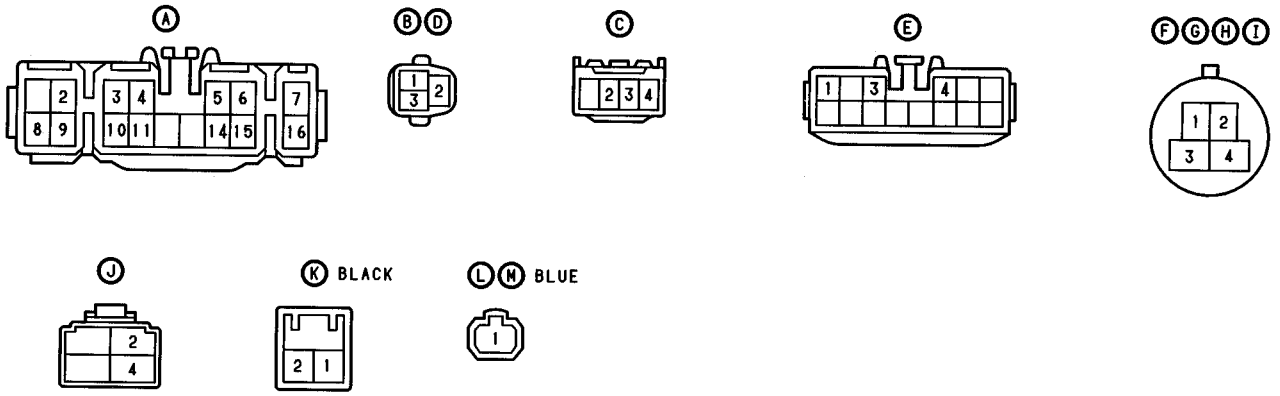

BACK DOOR LOCK (STATION W/G)

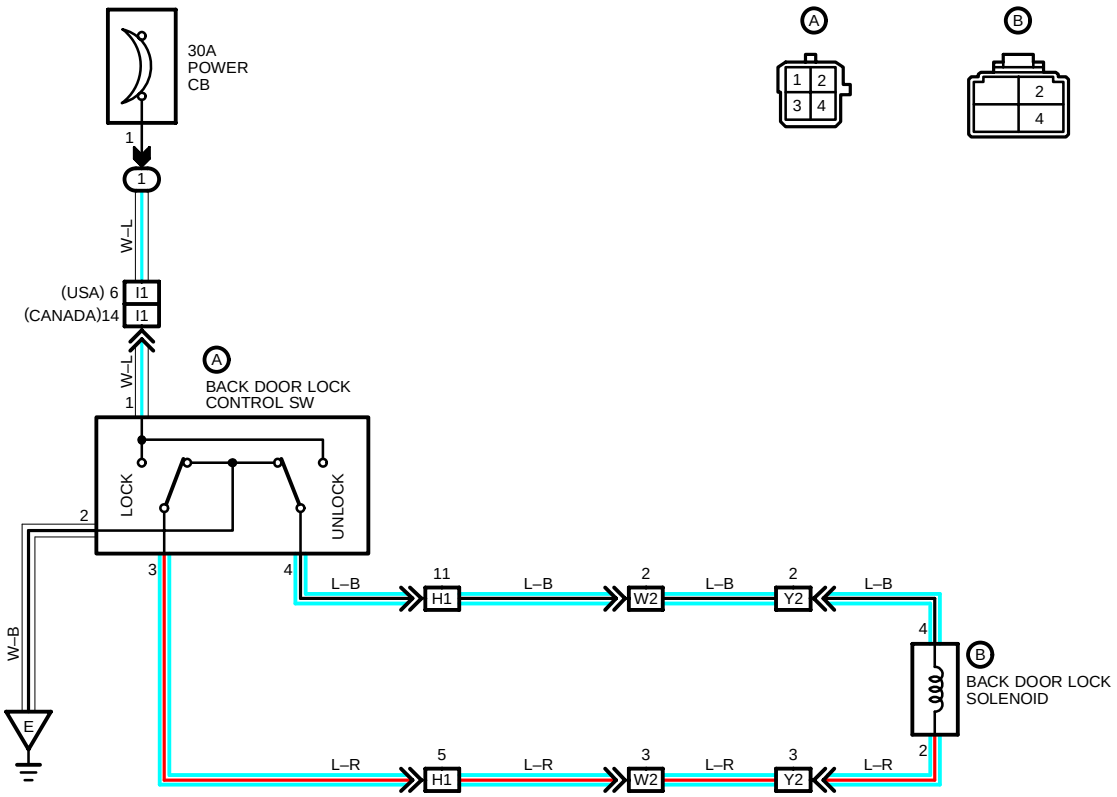

SERVICE HINTS

1–GROUND : ALWAYS APPROX. **12** VOLTS
2–GROUND : ALWAYS CONTINUITY

: PARTS LOCATION

CODE		SEE PAGE	CODE		SEE PAGE	CODE		SEE PAGE
A	B3	28	**B**	B9	27			

: RELAY BLOCKS

CODE	SEE PAGE	RELAY BLOCKS (RELAY BLOCK LOCATION)
1	23	R/B NO. 1 (LEFT KICK PANEL)

: CONNECTOR JOINING WIRE HARNESS AND WIRE HARNESS

CODE	SEE PAGE	JOINING WIRE HARNESS AND WIRE HARNESS (CONNECTOR LOCATION)
H1	34	FLOOR NO. 1 WIRE AND INSTRUMENT PANEL WIRE (LEFT KICK PANEL)
I1	34	COWL WIRE AND INSTRUMENT PANEL WIRE (INSTRUMENT PANEL CENTER)
W2	38	BACK DOOR NO. 1 WIRE AND FLOOR NO. 1 WIRE (BACK PANEL LEFT)
Y2	38	BACK DOOR NO. 1 WIRE AND BACK DOOR NO. 2 WIRE (BACK DOOR LEFT)

: GROUND POINTS

CODE	SEE PAGE	GROUND POINTS LOCATION
E	34	LEFT KICK PANEL

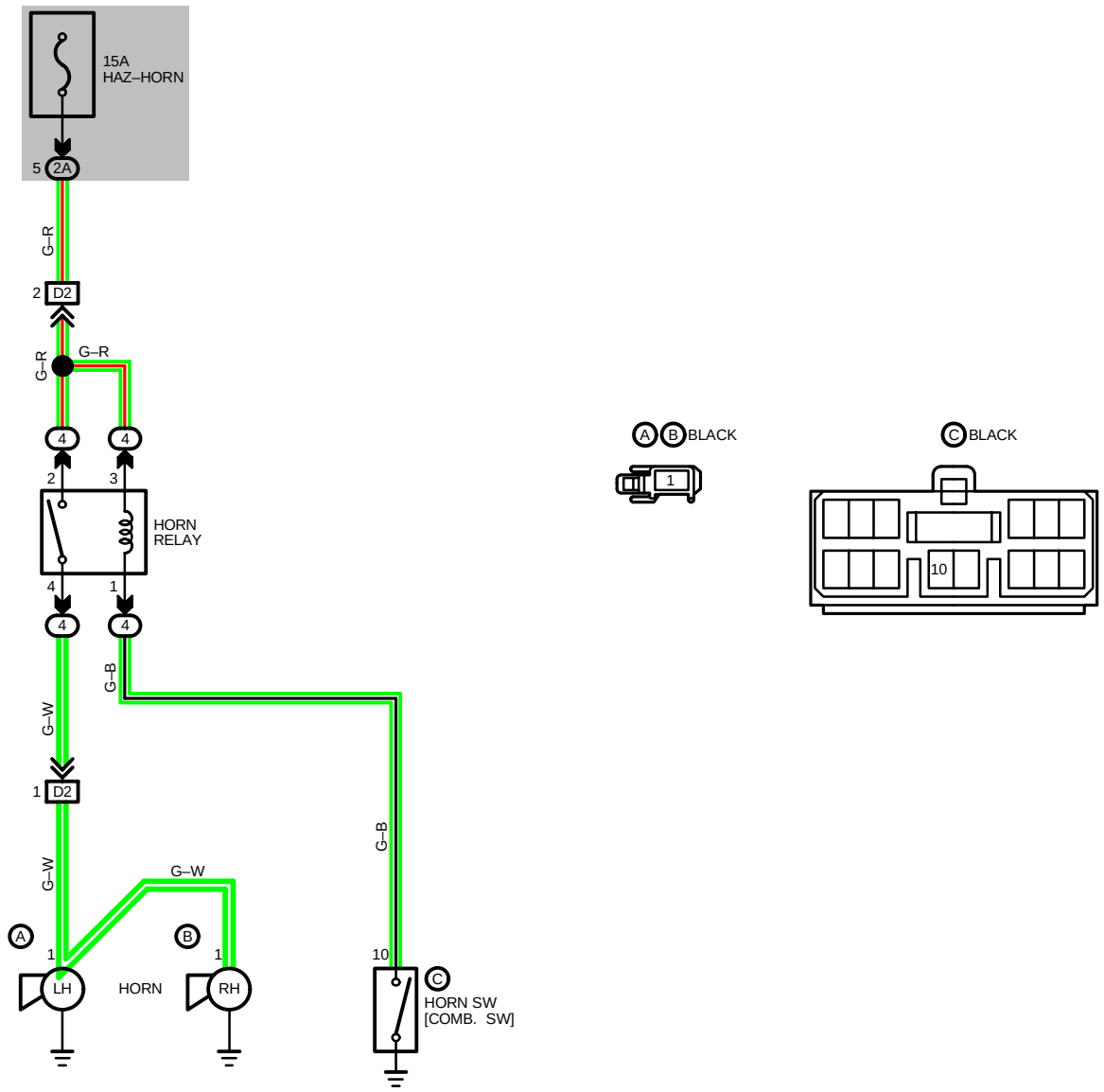

SERVICE HINTS

HORN RELAY

2 **(4)**–4 **(4)** : CLOSED WITH HORN SW ON

: PARTS LOCATION

CODE		SEE PAGE	CODE		SEE PAGE	CODE		SEE PAGE
A	H4	24 (2VZ–FE), 25 (3S–FE)	**B**	H3	24 (2VZ–FE), 25 (3S–FE)	**B**	C14	28

: RELAY BLOCKS

CODE	SEE PAGE	RELAY BLOCKS (RELAY BLOCK LOCATION)
4	23	R/B NO. 4 (RIGHT KICK PANEL)

: JUNCTION BLOCK AND WIRE HARNESS CONNECTOR

CODE	SEE PAGE	JUNCTION BLOCK AND WIRE HARNESS (CONNECTOR LOCATION)
2A	20	ENGINE ROOM MAIN WIRE AND J/B NO. 2 (ENGINE COMARTMENT LEFT)

: CONNECTOR JOINING WIRE HARNESS AND WIRE HARNESS

CODE	SEE PAGE	JOINING WIRE HARNESS AND WIRE HARNESS (CONNECTOR LOCATION)
D2	22 (2VZ–FE) 32 (3S–FE)	ENGINE ROOM WIRE AND COWL WIRE (RIGHT KICK PANEL)

REMOTE CONTROL MIRRORS

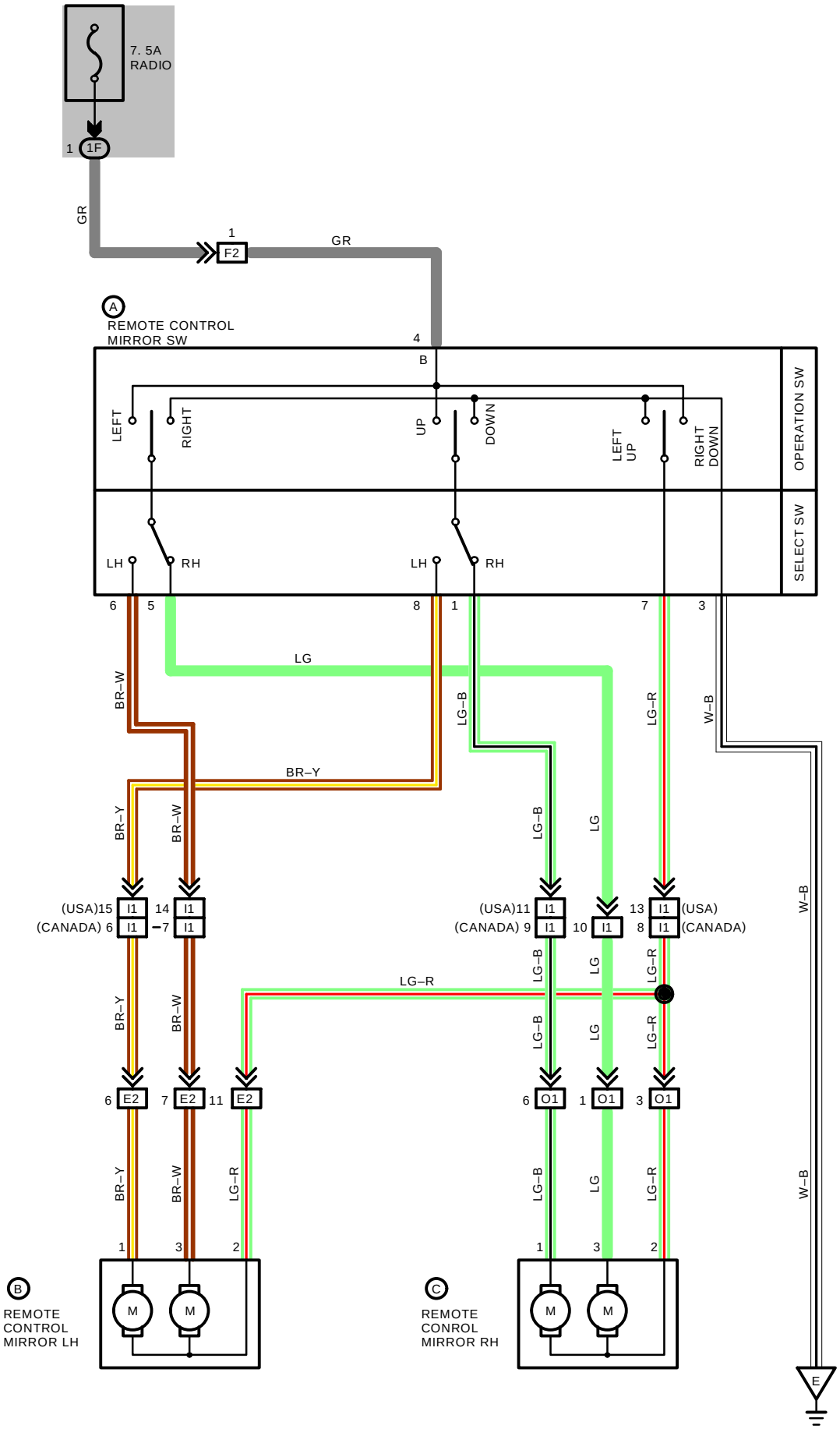

SERVICE HINTS

REMOTE CONTROL MIRROR SW

(A) 4–GROUND : APPROX. **12** VOLTS WITH IGNITION SW AT **ACC** OR **ON** POSITION
(A) 7–**(A)** 3 : CONTINUITY WITH OPERATION SW AT **UP** OR **LEFT** POSITION
(A) 4, **(A)** 7 : CONTINUITY WITH OPERATION SW AT **DOWN** OR **RIGHT** POSITION

: PARTS LOCATION

CODE		SEE PAGE	CODE		SEE PAGE	CODE		SEE PAGE
A	R9	28	**C**	R22	26 (S/D), 27 (STATION W/G)			
B	R21	26 (S/D), 27 (STATION W/G)						

: JUNCTION BLOCK AND WIRE HARNESS CONNECTOR

CODE	SEE PAGE	JUNCTION BLOCK AND WIRE HARNESS (CONNECTOR LOCATION)
1F	18	COWL SUB WIRE AND J/B NO. 1 (LEFT KICK PANEL)

: CONNECTOR JOINING WIRE HARNESS AND WIRE HARNESS

CODE	SEE PAGE	JOINING WIRE HARNESS AND WIRE HARNESS (CONNECTOR LOCATION)
E2	34	FRONT DOOR LH WIRE AND COWL WIRE (LEFT KICK PANEL)
F2	34	INSTRUMENT PANEL WIRE AND COWL SUB WIRE (LEFT KICK PANEL)
I1	34	COWL WIRE AND INSTRUMENT PANEL WIRE (INSTRUMENT PANEL CENTER)
O1	34	FRONT DOOR RH WIRE AND COWL WIRE (RIGHT KICK PANEL)

: GROUND POINTS

CODE	SEE PAGE	GROUND POINTS LOCATION
E	34	LEFT KICK PANEL



AUTOMATIC SHOULDER BELT (USA)

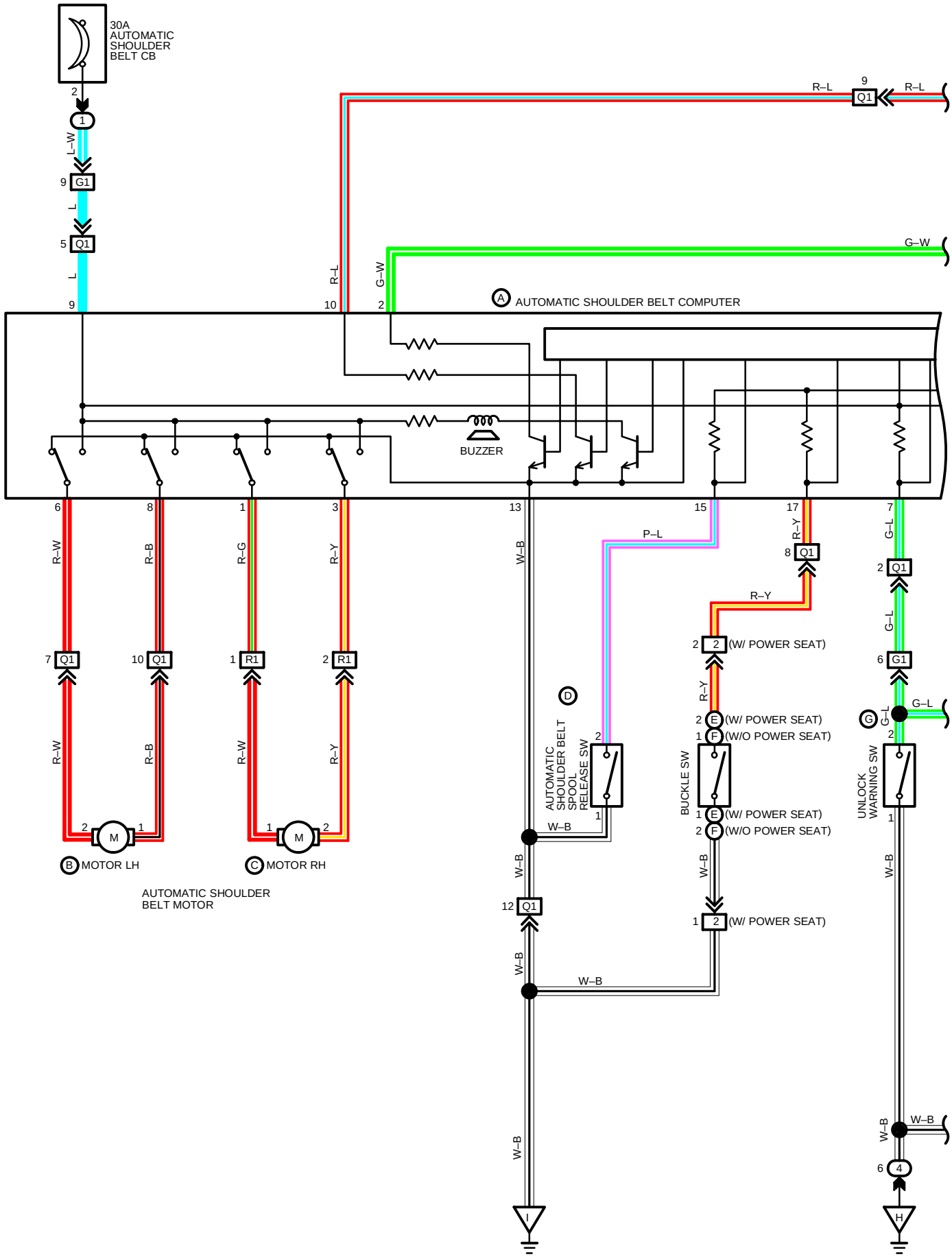

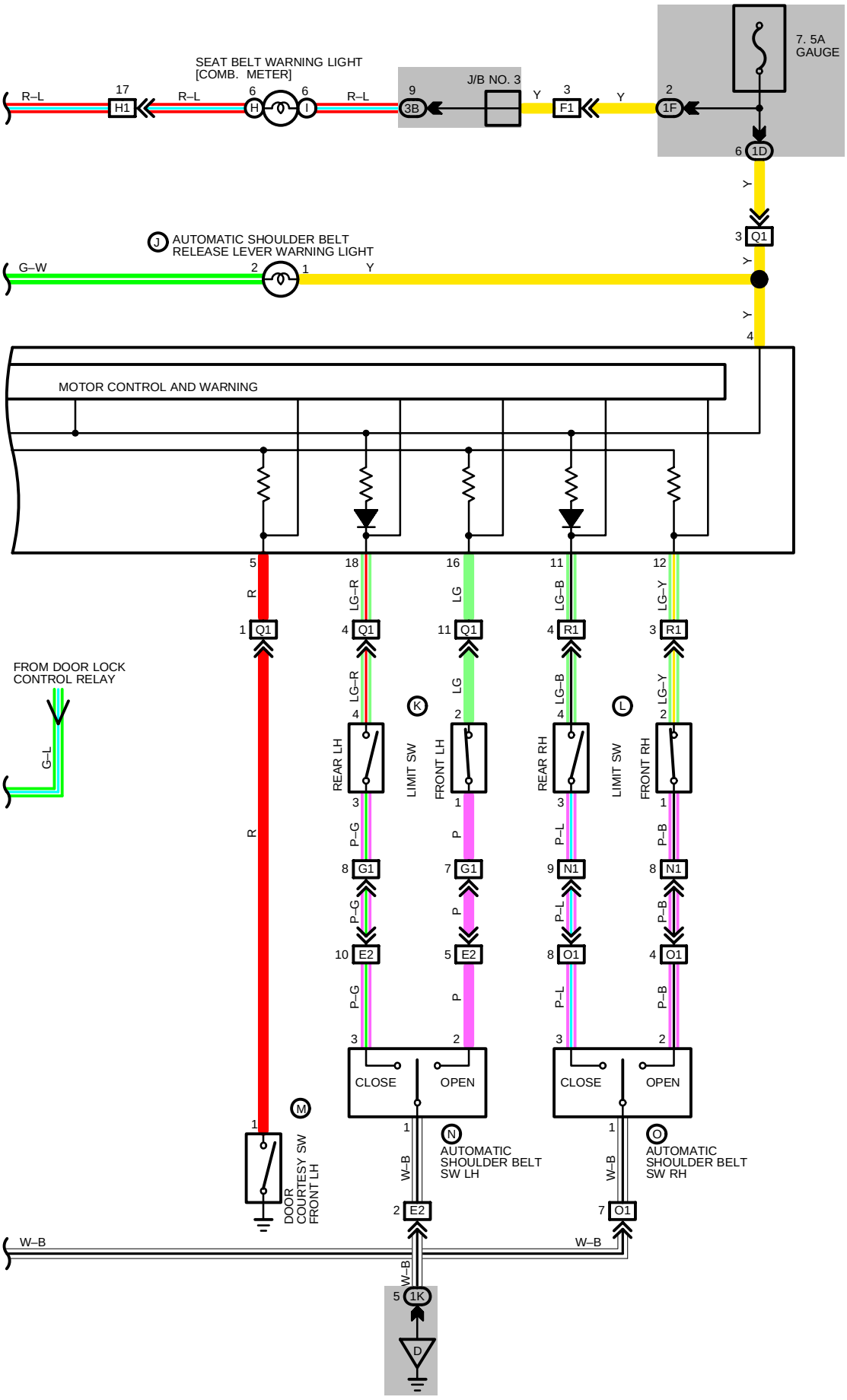
SEAT BELT WARNING LIGHT
[COMB. METER]
J/B NO. 3
7. 5A
GAUGE
AUTOMATIC SHOULDER BELT
RELEASE LEVER WARNING LIGHT
MOTOR CONTROL AND WARNING
FROM DOOR LOCK
CONTROL RELAY
REAR LH
LIMIT SW
FRONT LH
REAR RH
FRONT RH
CLOSE
OPEN
DOOR
COURTESY SW
FRONT LH
AUTOMATIC
SHOULDER BELT
SW LH
AUTOMATIC
SHOULDER BELT
SW RH

AUTOMATIC SHOULDER BELT (USA)

SERVICE HINTS

(A) AUTOMATIC SHOULDER BELT COMPUTER
1, 6–GROUND: APPROX. **12** VOLTS WITH DOOR OPEN AND FRONT LIMIT SW ON (RELEASING SHOULDER BELT)
3, 8–GROUND: APPROX. **12** VOLTS WITH DOOR CLOSED AND REAR LIMIT SW ON (FASTENING SHOULDER BELT)
4–GROUND: APPROX. **12** VOLTS WITH IGNITION SW ON
5–GROUND: CONTINUITY WITH FRONT LH DOOR OPEN
7–GROUND: CONTINUITY WITH IGNITION KEY IN CYLINDER
9–GROUND: ALWAYS APPROX **12** VOLTS
10–GROUND: **0** VOLTS **4**–**8** SECONDS WITH IGNITION SW ON AND **12** VOLTS **4**–**8** SECONDS AFTER IGNTION SW ON
13–GROUND: ALWAYS CONTINUITY

(D) SPOOL RELEASE SW
1–2 : OPEN WITH SPOOL RELEASE LEVER PULLED UP

(E) (F) BUCKLE SW
1–2 : OPEN WITH DRIVER'S LAP BELT IN USE

(G) UNLOCK WARNING SW
1–2 : CLOSED WITH IGNITION KEY IN CYLINDER

(K) (L) FRONT LIMIT SW
1–2 : OPEN WITH BELT ANCHOR AT FRONT END OF GUIDE RAIL

(K) (L) REAR LIMIT SW
4–3 : OPEN WITH BELT ANCHOR AT REAR END OF GUIDE RAIL

(M) DOOR COURTESY SW
1–GROUND : CLOSED WITH DOOR OPEN

(N) (O) AUTOMATIC SHOULDER BELT SW
3–1 : CLOSED WITH DOOR CLOSED
2–1 : CLOSED WITH DOOR OPEN

: PARTS LOCATION

CODE		SEE PAGE	CODE		SEE PAGE	CODE		SEE PAGE
A	A34	26 (S/D), 27 (STATION W/G)	**F**	B10	28	**K**	A35	26 (S/D), 27 (STATION W/G)
B	A37	26 (S/D), 27 (STATION W/G)	**G**	U1	28	**L**	A36	26 (S/D), 27 (STATION W/G)
C	A38	26 (S/D), 27 (STATION W/G)	**H**	C13	28	**M**	D19	26 (S/D), 27 (STATION W/G)
D	A42	26 (S/D), 27 (STATION W/G)	**I**	C11	28	**N**	A40	26 (S/D), 27 (STATION W/G)
E	B7	28	**J**	A39	26 (S/D), 27 (STATION W/G)	**O**	A41	26 (S/D), 27 (STATION W/G)

: RELAY BLOCKS

CODE	SEE PAGE	RELAY BLOCKS (RELAY BLOCK LOCATION)
1	23	R/B NO. 1 (LEFT KICK PANEL)
4	23	R/B NO. 4 (RIGHT KICK PANEL)

: JUNCTION BLOCK AND WIRE HARNESS CONNECTOR

CODE	SEE PAGE	JUNCTION BLOCK AND WIRE HARNESS (CONNECTOR LOCATION)
1D	18	FLOOR WIRE AND J/B NO. 1 (LEFT KICK PANEL)
1F	18	COWL SUB WIRE AND J/B NO. 1 (LEFT KICK PANEL)
1K	18	COWL WIRE AND J/B NO. 1 (LEFT KICK PANEL)
3B	22	INSTRUMENT PANEL WIRE AND J/B NO. 3 (INSTRUMENT PANEL LEFT)

: CONNECTOR JOINING WIRE HARNESS AND WIRE HARNESS

CODE	SEE PAGE	JOINING WIRE HARNESS AND WIRE HARNESS (CONNECTOR LOCATION)
E2	34	FRONT DOOR LH WIRE AND COWL WIRE (LEFT KICK PANEL)
F1	34	INSTRUMENT PANEL WIRE AND COWL SUB WIRE (LEFT KICK PANEL)
G1	34	FLOOR NO. 1 WIRE AND COWL WIRE (LEFT KICK PANEL)
H1	34	FLOOR NO. 1 WIRE AND INSTRUMENT PANEL WIRE (LEFT KICK PANEL)
N1	34	FLOOR NO. 2 WIRE AND COWL WIRE (RIGHT KICK PANEL)
O1	34	FRONT DOOR RH WIRE AND COWL WIRE (RIGHT KICK PANEL)
Q1	36 (S/D) 38 (STATION W/G)	FLOOR NO. 3 WIRE AND FLOOR NO. 1 WIRE (FLOOR CENTER)
R1	36 (S/D) 38 (STATION W/G)	FLOOR NO. 3 WIRE AND FLOOR NO. 2 WIRE (FLOOR CENTER)
a2	34	FLOOR NO. 1 WIRE AND SEAT WIRE (UNDER DRIVER'S SEAT)

: GROUND POINTS

CODE	SEE PAGE	GROUND POINTS LOCATION
D	34	J/B NO. 1 SET BOLT
H	34	R/B NO. 4 SET BOLT
I	36 (S/D)	LEFT REAR FENDER
	38 (STATION W/G)	

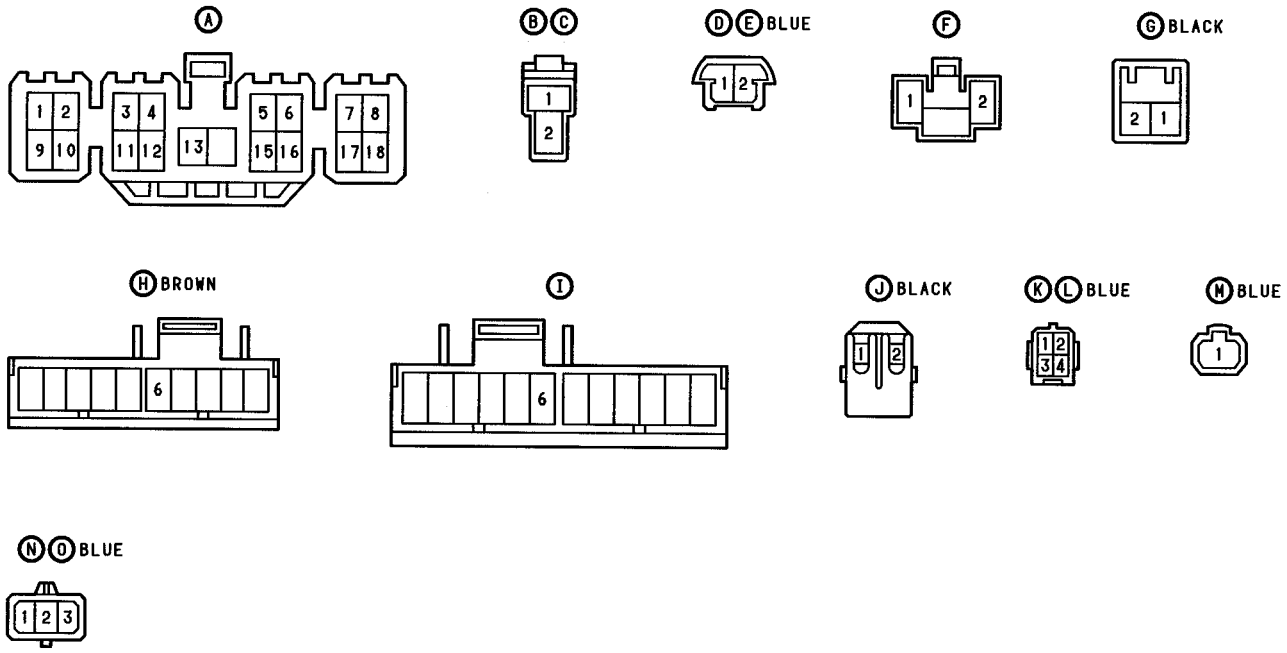

UNLOCK AND SEAT BELT WARNING

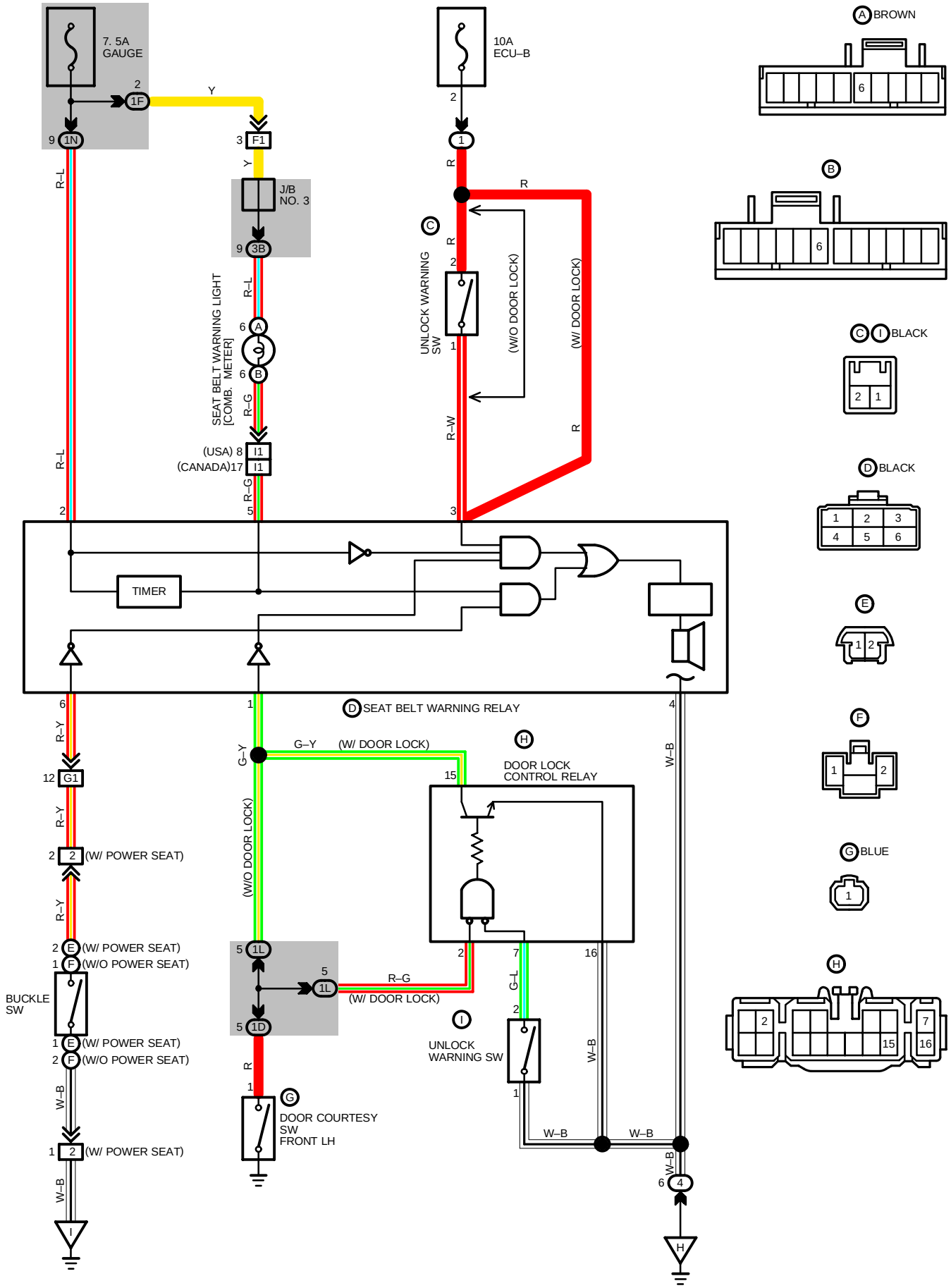

SYSTEM OUTLINE

1. SEAT BELT WARNING SYSTEM

WHEN THE IGNITION SW IS TURNED ON, CURRENT FLOWS FROM THE GAUGE FUSE TO TERMINAL 2 OF THE SEAT BELT WARNING RELAY. AT THE SAME TIME, CURRENT FLOWS TO TERMINAL 5 THROUGH THE SEAT BELT WARNING LIGHT. THIS CURRENT ACTIVATES THE SEAT BELT WARNING RELAY AND CURRENT FLOWS FROM TERMINAL 2 → RELAY → TERMINAL 4 → GROUND, AND THE CURRENT WHICH HAS FLOWED THROUGH THE SEAT BELT WARNING LIGHT FOR APPROX. 4–8 SECONDS FLOWS FROM TERMINAL 5 OF THE RELAY → TERMINAL 6 → GROUND, CAUSING THE WARNING LIGHT TO LIGHT UP. AT THE SAME TIME AS THE SEAT BELT WARNING LIGHT LIGHTS UP, THE CURRENT APPLIED TO TERMINAL 2 FLOWS THROUGH THE RELAY TO TERMINAL 6 → BUCKLE SW → GROUND, CAUSING THE SEAT BELT WARNING BUZZER TO SOUND FOR ABOUT 4–8 SECONDS. HOWEVER, IF THE SEAT BELT IS PUT ON (BUCKLE SW OFF) DURING THIS PERIOD, THEN THE BUZZER WILL STOP.

2. UNLOCK WARNING SYSTEM

WITH THE IGNITION KEY INSERTED IN THE KEY CYLINDER (UNLOCK SW ON), THE IGNITION SW STILL OFF AND DOOR OPEN (DOOR COURTESY SW ON), WHEN A SIGNAL IS INPUT TO TERMINAL 1 OF THE RELAY. THE SEAT BELT WARNING RELAY OPERATES, CURRENT FLOWS FROM TERMINAL 3 OF THE RELAY → TERMINAL 4 → GROUND AND THE UNLOCK WARNING BUZZER SOUNDS.

SERVICE HINTS

(C) UNLOCK WARNING SW

CLOSED WITH IGNITION KEY IN CYLINDER

(D) SEAT BELT WARNING RELAY

4–GROUND : ALWAYS CONTINUITY
1–GROUND : CONTINUITY WITH DOOR OPEN (W/O DOOR LOCK, POWER WINDOW)
CONTINUITY WITH DOOR OPEN AND IGNITION KEY IN CYLINDER (W/ DOOR LOCK, POWER WINDOW)
2–GROUND : APPROX. **12** VOLTS WITH IGNITION SW ON
3–GROUND : APPROX. **12** VOLTS WITH IGNITION KEY IN CYLINDER (W/O DOOR LOCK, POWER WINDOW)
ALWAYS APPROX. **12** VOLTS (W/ DOOR LOCK, POWER WINDOW)
6–GROUND : CONTINUITY UNLESS DRIVER'S LAP BELT IN USE
5–GROUND : **0** VOLT FOR **4–8** SECONDS WITH IGNITION SW ON AND **12** VOLTS **4–8** SECONDS AFTER IGNITION SW ON

(E) (F) BUCKLE SW

1–2 : OPEN WITH DRIVER'S LAP BELT IN USE

(G) DOOR COURTESY SW

1–GROUND : CLOSED WITH DOOR OPEN

: PARTS LOCATION

CODE		SEE PAGE	CODE		SEE PAGE	CODE		SEE PAGE
A	C11	28	**D**	S5	28	**G**	D19	26 (S/D), 27 (STATION W/G)
B	C13	28	**E**	B7	28	**H**	D16	28
C	U1	28	**F**	B10	28			

: RELAY BLOCKS

CODE	SEE PAGE	RELAY BLOCKS (RELAY BLOCK LOCATION)
1	23	R/B NO. 1 (LEFT KICK PANEL)
4	23	R/B NO. 4 (RIGHT KICK PANEL)

: JUNCTION BLOCK AND WIRE HARNESS CONNECTOR

CODE	SEE PAGE	JUNCTION BLOCK AND WIRE HARNESS (CONNECTOR LOCATION)
1D	18	FLOOR WIRE AND J/B NO. 1 (LEFT KICK PANEL)
1F	18	COWL SUB WIRE AND J/B NO. 1 (LEFT KICK PANEL)
1L	18	COWL WIRE AND J/B NO. 1 (LEFT KICK PANEL)
1N		
3B	22	INSTRUMENT PANEL WIRE AND J/B NO. 3 (INSTRUMENT PANEL LEFT)

: CONNECTOR JOINING WIRE HARNESS AND WIRE HARNESS

CODE	SEE PAGE	JOINING WIRE HARNESS AND WIRE HARNESS (CONNECTOR LOCATION)
F1	34	INSTRUMENT PANEL WIRE AND COWL SUB WIRE (LEFT KICK PANEL)
G1	34	FLOOR NO. 1 WIRE AND COWL WIRE (LEFT KICK PANEL)
I1	34	COWL WIRE AND INSTRUMENT PANEL WIRE (INSTRUMENT PANEL CENTER)
a2	34	FLOOR NO. 1 WIRE AND SEAT WIRE (UNDER DRIVER'S SEAT)

: GROUND POINTS

CODE	SEE PAGE	GROUND POINTS LOCATION
H	34	R/B NO. 4 SET BOLT
I	36 (S/D)	LEFT REAR FENDER
	38 (STATION W/G)	

CRUISE CONTROL

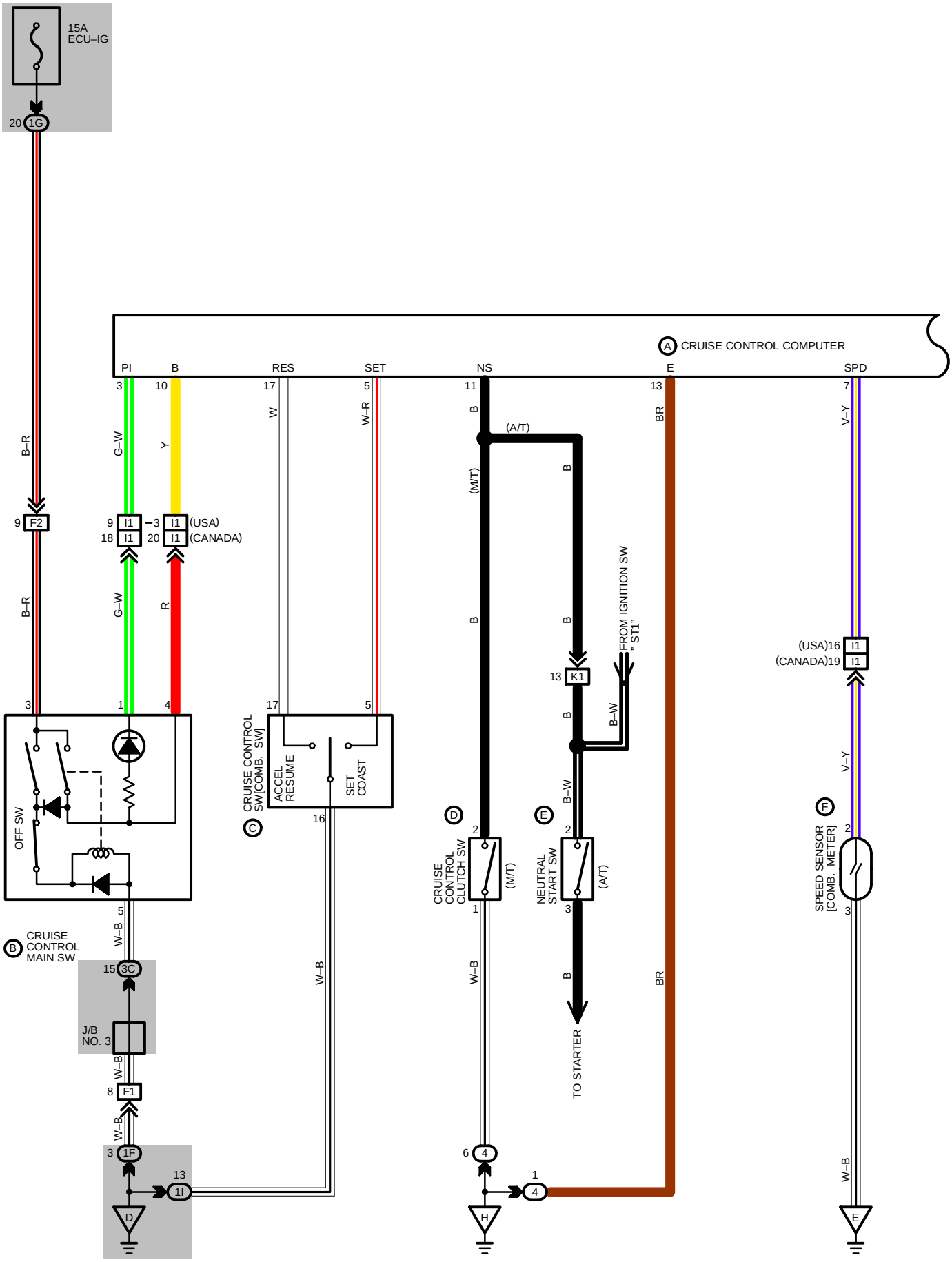

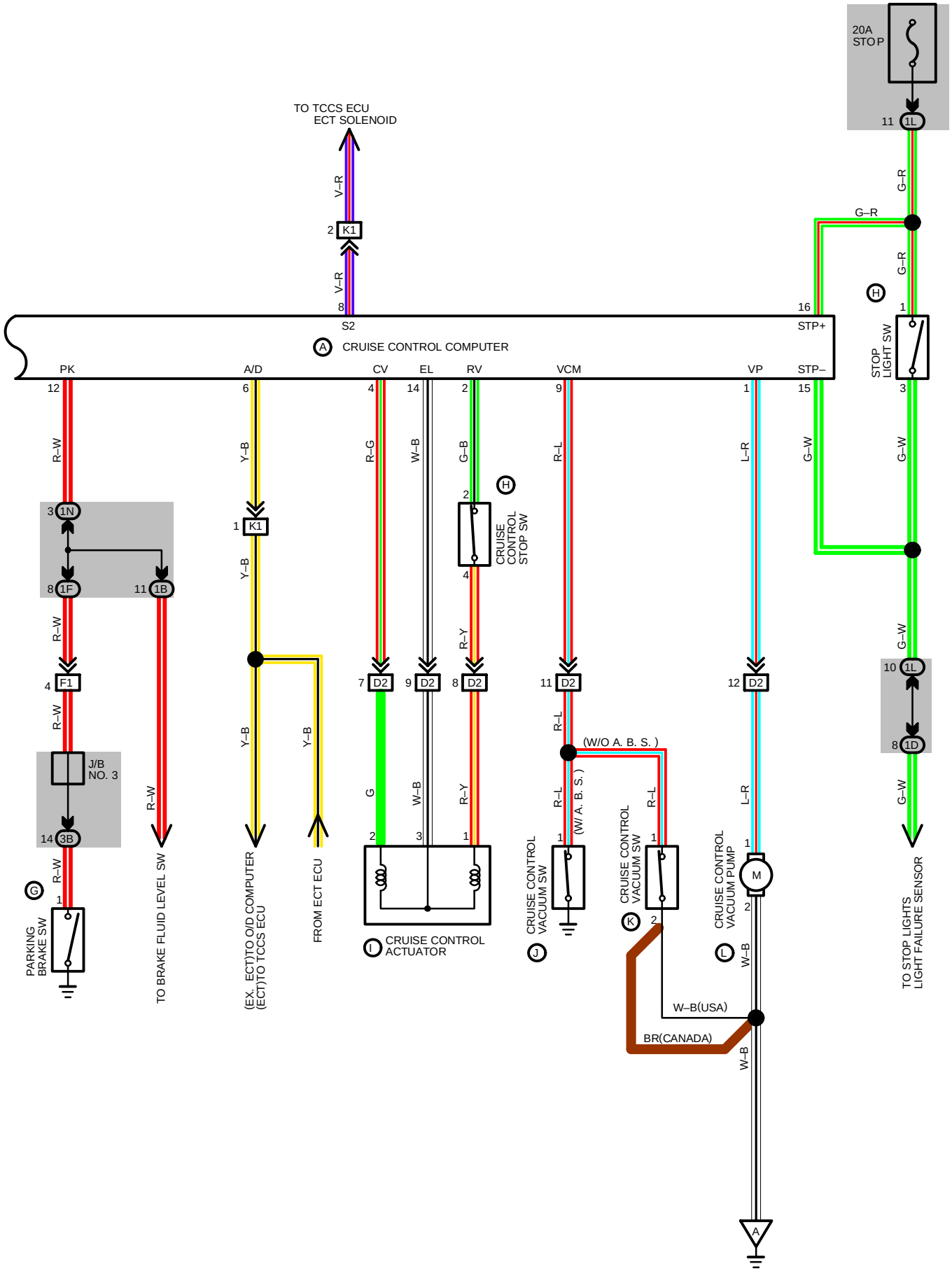

20A STOP
TO TCCS ECU ECT SOLENOID
V–R
K1
S2
STP+
STP–
CRUISE CONTROL COMPUTER
PK
A/D
CV
EL
RV
VCM
VP
STOP LIGHT SW
R–W
Y–B
R–G
W–B
G–B
R–L
L–R
G–W
G–R
1N
1F
1B
F1
J/B NO. 3
3B
D2
CRUISE CONTROL STOP SW
R–Y
(W/O A. B. S.)
(W/ A. B. S.)
1L
1D
PARKING BRAKE SW
TO BRAKE FLUID LEVEL SW
(EX. ECT)TO O/D COMPUTER (ECT)TO TCCS ECU
FROM ECT ECU
CRUISE CONTROL ACTUATOR
CRUISE CONTROL VACUUM SW
CRUISE CONTROL VACUUM PUMP
M
W–B(USA)
BR(CANADA)
TO STOP LIGHTS LIGHT FAILURE SENSOR

CRUISE CONTROL

SYSTEM OUTLINE

VOLTAGE FROM THE BATTERY IS NORMALLY APPLIED TO TERMINAL 16 OF THE CRUISE CONTROL COMPUTER. WHEN THE IGNITION SW IS TURNED TO ON, THE CURRENT FLOWING THROUGH THE ECU–IG FUSE FLOWS THEN TO TERMINAL 3 OF THE CRUISE CONTROL MAIN SW. IF AT THIS TIME THE MAIN SW IS TURNED TO ON, THE CURRENT APPLIED TO TERMINAL 3 FLOWS FROM THE POWER INDICATOR → TERMINAL 3 OF THE COMPUTER, CAUSING THE INDICATOR LIGHT TO LIGHT UP. AT THE SAME TIME, CURRENT FLOWS TO TERMINAL 10 OF THE COMPUTER, MAINTAINING THE CRUISE CONTROL SYSTEM IN CONSTANT READINESS FOR OPERATION.

1. CRUISE CONTROL DRIVING

WHEN THE MAIN SW IS TURNED TO ON AND THE SET SW IS PUSHED IN WITH THE VEHICLE SPEED WITHIN THE SET LIMIT (APPROX. 40km/h, 25MPH TO 200km/h, 124MPH), A SIGNAL IS INPUT TO TERMINAL 5 OF THE COMPUTER AND THE VEHICLE SPEED AT THAT TIME IS RECORDED IN THE COMPUTER MEMORY AS THE SET SPEED. THE COMPUTER COMPARES THE RECORDED SET SPEED WITH THE ACTUAL VEHICLE SPEED INPUT INTO TERMINAL 7 FROM THE SPEED SENSOR, AND CONTROLS THE CRUISE CONTROL ACTUATOR IN ORDER TO MAINTAIN THE SET VEHICLE SPEED.

WHEN THE ACTUAL VEHICLE SPEED IS LOWER THAN THE SET SPEED, COMPUTER OPERATION LENGTHENS THE PERIOD OF CURRENT FLOW FROM TERMINAL 4 OF THE COMPUTER → TERMINAL 2 OF THE ACTUATOR → THE CONTROL VALVE → TERMINAL 3 → TERMINAL 14 OF THE COMPUTER, THE CABLE IS PULLED IN THE DIRECTION FOR OPENING THROTTLE VALVE AND THE VEHICLE SPEED INCREASES.

WHEN THE ACTUAL VEHICLE SPEED IS HIGHER THAN THE SET SPEED, A SHORTER PERIOD OF CURRENT FLOW TO THE CONTROL VALVE RETURNS THE CABLE IN THE DIRECTION FOR CLOSING THE THROTTLE VALVE AND THE VEHICLE SPEED DECREASES.

<ACTUATOR OPERATION>

WHEN THE CRUISE CONTROL SYSTEM OPERATES (THE SET SIGNAL IS INPUT), CURRENT FLOWS FROM THE COMPUTER TO THE RELEASE VALVE, CLOSING THE ATMOSPHERIC INTAKE PORT.

WHEN THERE IS CONTINUITY TO THE CONTROL VALVE, VACUUM IS INTRODUCED INSIDE THE ACTUATOR, AND WHEN THERE IS NO CONTINUITY, VACUUM INTAKE STOPS AND ATMOSPHERE IS INTRODUCED. IN OTHER WORDS, THE ACTUATOR (THROTTLE VALVE) IS CONTROLLED BY CHANGING THE RATIO OF CONTINUITY AND NON–CONTINUITY TO THE CONTROL VALVE WITHIN A SPECIFIED PERIOD OF TIME.

<ROLE OF THE VACUUM SW AND VACUUM PUMP>

WHEN THE VACUUM SW TURNS ON DURING CRUISE CONTROL OPERATION, ITS SIGNAL IS INPUT TO TERMINAL 9 OF THE COMPUTER SO THAT THE COMPUTER APPLIES CURRENT TO OPERATE THE VACUUM PUMP (TERMINAL 1 OF THE COMPUTER → TERMINAL 1 OF THE PUMP → TERMINAL 2 → GROUND) AND SUPPLEMENT THE ENGINE VACUUM WHICH BY ITSELF IS INADEQUATE FOR CONTROL.

2. CANCEL MECHANISM

IF ANY OF THE FOLLOWING OPERATIONS IS PERFORMED DURING CRUISE CONTROL, THEN CONTINUITY TO THE CONTROL VALVE AND THE RELEASE VALVE IS CUT OFF AND CRUISE CONTROL IS RELEASED:

- DEPRESSING THE CLUTCH PEDAL (CLUTCH SW ON), SIGNAL INPUT TO TERMINAL 11 OF THE COMPUTER.
- PLACING THE NEUTRAL START SW IN “N” RANGE (NEUTRAL START SW ON), SIGNAL INPUT TO TERMINAL 11 OF THE COMPUTER.
- DEPRESSING THE BRAKES PEDAL (STOP LIGHT SW ON), SIGNAL INPUT TO TERMINAL 15 OF THE COMPUTER.
- PULLING THE PARKING BRAKE LEVER (PARKING BRAKE SW ON), SIGNAL INPUT TO TERMINAL 12 OF THE COMPUTER.

3. COAST CONTROL

WHILE THE COAST SW IS ON DURING CRUISE CONTROL, CURRENT FLOW TO THE CONTROL VALVE AND RELEASE VALVE IS STOPPED AND THE VEHICLE DECELERATES UNTIL THE SW IS RELEASED. THE VEHICLE SPEED WHEN THE SW IS RELEASED IS THEN RECORDED IN MEMORY.

4. RESUME CONTROL

BY TURNING THE RESUME SW TO ON AFTER CANCELLATION OF THE CRUISE CONTROL SYSTEMS, THE VEHICLE SPEED WILL RETURN TO THE SPEED SET BEFORE CANCELLATION, PROVIDED THAT THE VEHICLE SPEED IS WITHIN THE SET LIMITS.

5. ACCEL CONTROL

WHEN THE ACCEL SW IS TURNED TO ON DURING CRUISE CONTROL DRIVING, CURRENT CONTINUES TO FLOW TO THE CONTROL VALVE AND THE VEHICLE ACCELERATES. THE VEHICLE SPEED WHEN THE SW IS TURNED OFF IS RECORDED IN MEMORY.

SERVICE HINTS

(A) CRUISE CONTROL COMPUTER

(DISCONNECT THE COMPUTER CONNECTOR)

2–14	:	APPROX. **68** (ACTUATOR RELEASE VALVE)
4–14	:	APPROX. **30** (ACTUATOR CONTROL VALVE)
5–GROUND	:	CONTINUITY WITH SET, COAST SW ON
7–GROUND	:	**1** PULSE EACH **40** CM (DRIVE VEHICLE SLOWRY)
11–GROUND	:	CONTINUITY WITH CLUTCH PEDAL DEPRESSED (M/T) OR SHIFT LEVER IN **N** OR **P** RANGE (A/T) (ONE OF THE CANCEL SW)
12–GROUND	:	CONTINUITY WITH PKB LEVER PULL UP (ONE OF THE CANCEL SW) OR BRAKE FLUID LEVEL WARNING SW ON
13–GROUND	:	ALWAYS CONTINUITY
17–GROUND	:	CONTINUITY WITH RESUME, ACCEL SW ON
10–GROUND	:	APPROX. **12** VOLTS WITH IGNITION SW ON AND CRUISE CONTROL MAIN SW ON
15–GROUND	:	APPROX. **12** VOLTS WITH BRAKE PEDAL DEPRESSED (ONE OF THE CANCEL SW)
16–GROUND	:	ALWAYS APPROX. **12** VOLTS

: PARTS LOCATION

CODE		SEE PAGE	CODE		SEE PAGE	CODE		SEE PAGE
A	C17	28	**E**	N1	24 (2VZ–FE), 25 (3S–FE)	**I**	C3	24 (2VZ–FE), 25 (3S–FE)
B	C18	28	**R**	C13	28	**J**	C5	24 (2VZ–FE), 25 (3S–FE)
C	C15	28	**G**	P1	28	**K**	C5	24 (2VZ–FE), 25 (3S–FE)
D	C16	28	**H**	S9	28	**L**	C4	24 (2VZ–FE), 25 (3S–FE)

: JUNCTION BLOCK AND WIRE HARNESS CONNECTOR

CODE	SEE PAGE	JUNCTION BLOCK AND WIRE HARNESS (CONNECTOR LOCATION)
1B	18	ENGINE ROOM MAIN WIRE AND J/B NO. 1 (LEFT KICK PANEL)
1D	18	FLOOR WIRE AND J/B NO. 1 (LEFT KICK PANEL)
1F	18	COWL SUB WIRE AND J/B NO. 1 (LEFT KICK PANEL)
1G		
1I	18	COWL WIRE AND J/B NO. 1 (LEFT KICK PANEL)
1L		
1N		
3B	22	INSTRUMENT PANEL WIRE AND J/B NO. 3 (INSTRUMENT PANEL LEFT)
3C		

: CONNECTOR JOINING WIRE HARNESS AND WIRE HARNESS

CODE	SEE PAGE	JOINING WIRE HARNESS AND WIRE HARNESS (CONNECTOR LOCATION)
D2	30 (2VZ–FE)	ENGINE ROOM WIRE AND COWL WIRE (RIGHT KICK PANEL)
	32 (3S–FE)	
F1	34	INSTRUMENT PANEL WIRE AND COWL SUB WIRE (LEFT KICK PANEL)
F2		
I1	34	COWL WIRE AND INSTRUMENT PANEL WIRE (INSTRUMENT PANEL CENTER)
K1	34	ENGINE WIRE AND COWL WIRE (BEHIND GLOVE BOX)

: GROUND POINTS

CODE	SEE PAGE	GROUND POINTS LOCATION
A	30 (2VZ–FE)	RIGHT FENDER
	32 (3S–FE)	
D	34	J/B NO. 1 SET BOLT
E	34	LEFT KICK PANEL
H	34	R/B NO. 4 SET BOLT

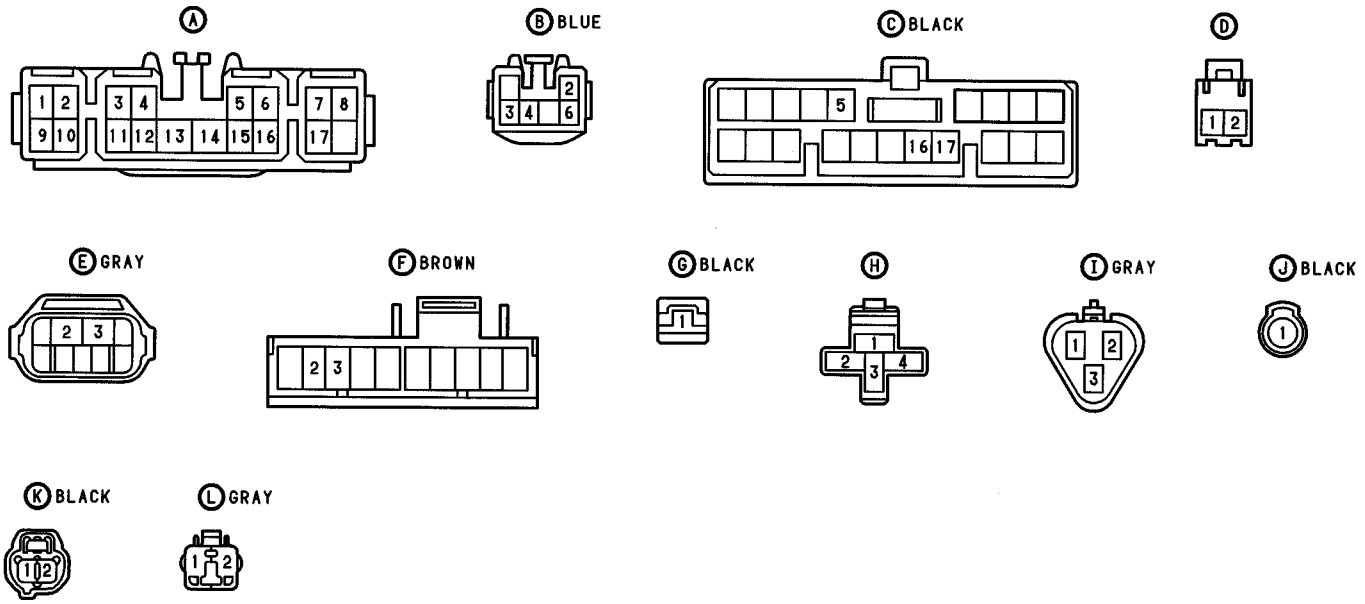

ECT AND A/T INDICATOR (2VZ–FE)

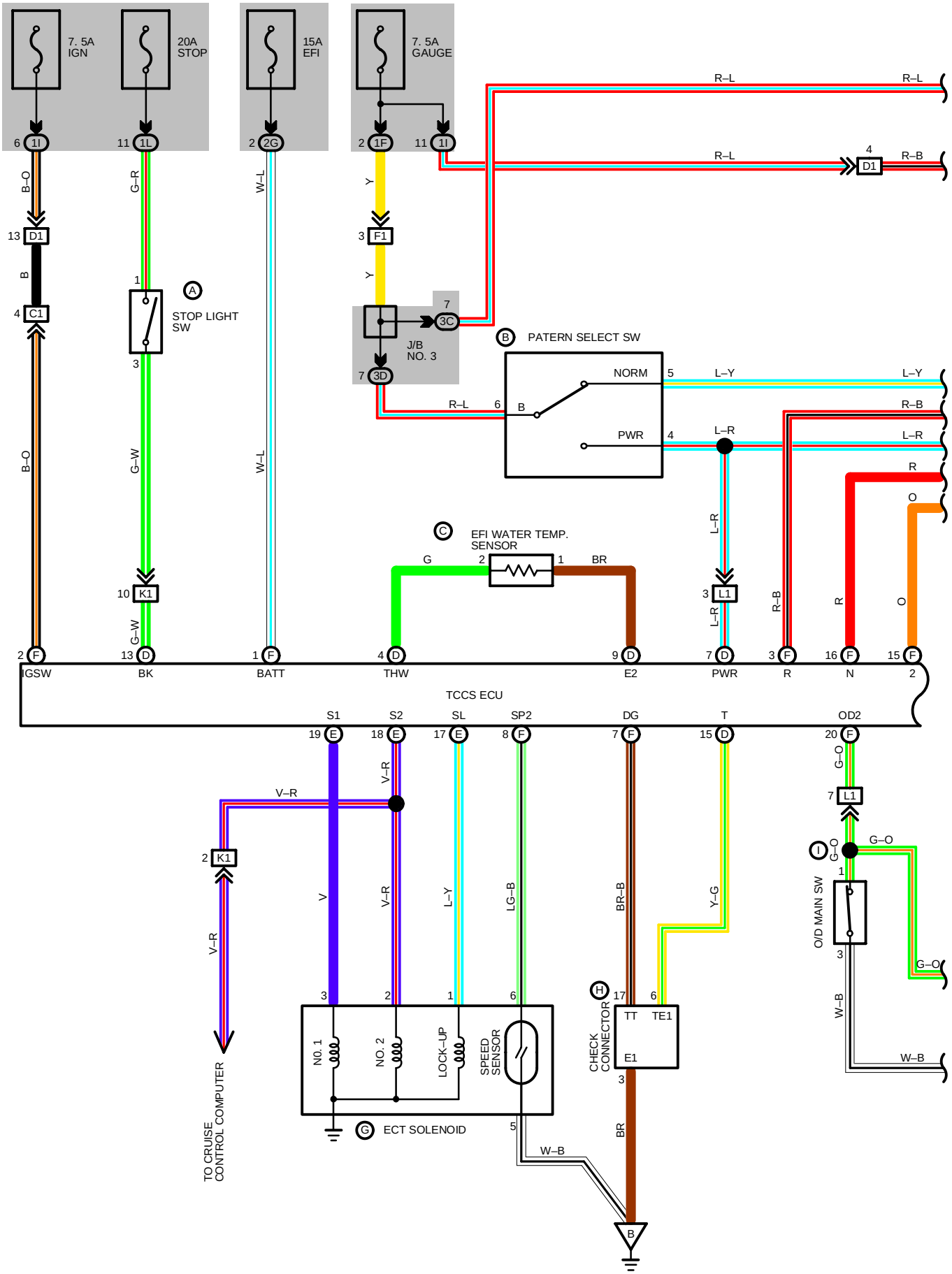

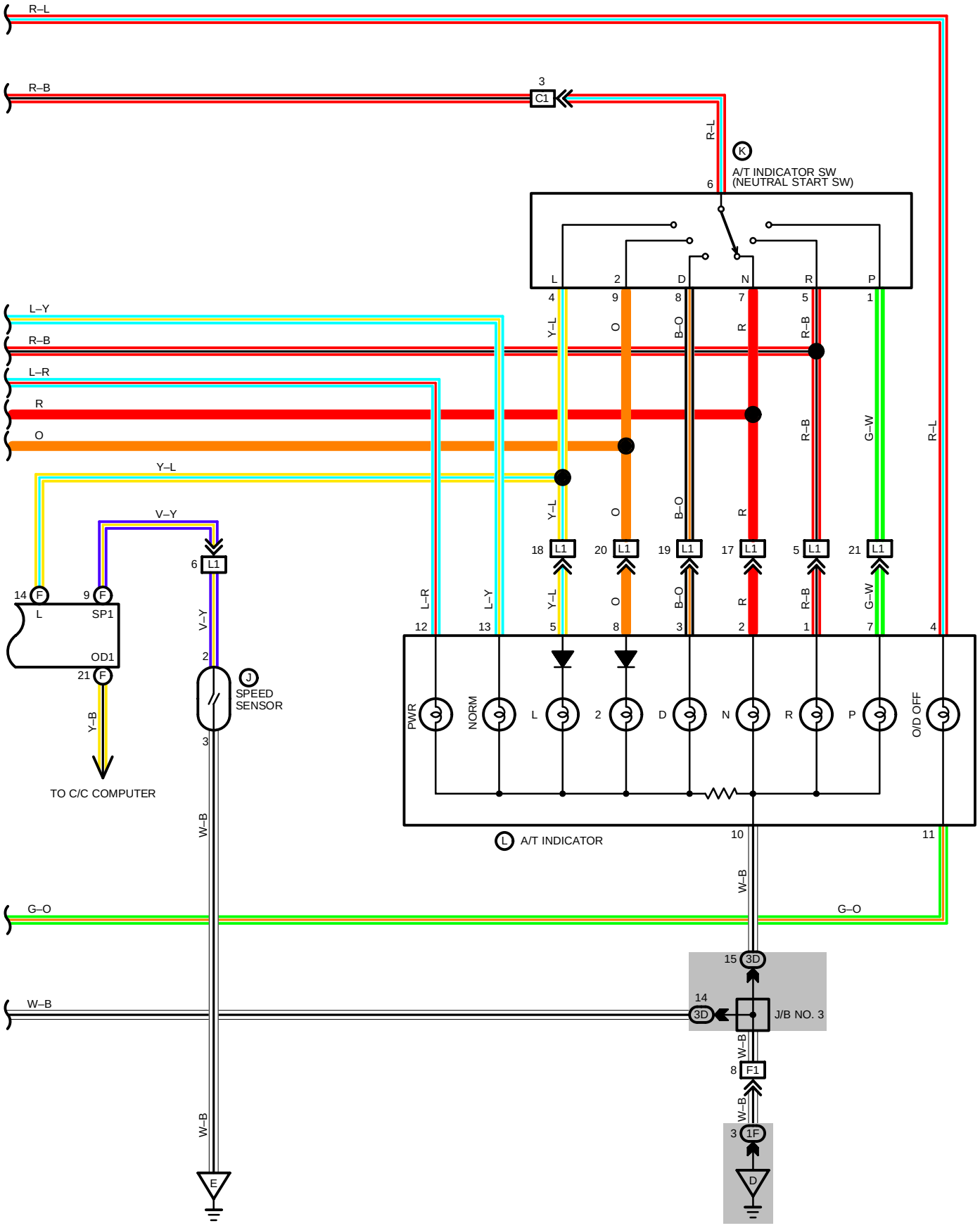
R–L
R–B
3
C1
R–L
K
A/T INDICATOR SW
(NEUTRAL START SW)
6
L
2
D
N
R
P
4
9
8
7
5
1
L–Y
R–B
L–R
R
O
Y–L
O
B–O
R
R–B
R–B
G–W
R–L
Y–L
V–Y
6
L1
18
L1
20
L1
19
L1
17
L1
5
L1
21
L1
14
F
9
F
L
SP1
OD1
21
F
Y–B
TO C/C COMPUTER
V–Y
2
J
SPEED
SENSOR
3
W–B
L–R
L–Y
Y–L
O
B–O
R
R–B
G–W
12
13
5
8
3
2
1
7
4
PWR
NORM
L
2
D
N
R
P
O/D OFF
L
A/T INDICATOR
10
11
W–B
G–O
G–O
15
3D
14
3D
J/B NO. 3
W–B
8
F1
W–B
3
1F
D
W–B
E

ECT AND A/T INDICATOR (2VZ–FE)

SYSTEM OUTLINE

PREVIOUS AUTOMATIC TRANSMISSIONS HAVE SELECTED EACH GEAR SHIFT USING MECHANICALLY CONTROLLED THROTTLE HYDRAULIC PRESSURE, GOVERNOR HYDRAULIC PRESSURE AND LOCK–UP HYDRAULIC PRESSURE. THE ECT, HOWEVER, ELECTRICALLY CONTROLS THE LINE PRESSURE AND LOCK–UP PRESSURE ETC., THROUGH THE SOLENOID VALVE. TCCS COMPUTER CONTROL OF THE SOLENOID VALVE BASED ON THE INPUT SIGNALS FROM EACH SENSOR MAKES SMOOTH DRIVING POSSIBLE BY SHIFT SELECTION FOR EACH GEAR WHICH IS MOST APPROPRIATE TO THE DRIVING CONDITIONS AT THAT TIME.

1. GEAR SHIFT OPERATION

DURING DRIVING, THE COMPUTER SELECTS THE SHIFT FOR EACH GEAR WHICH IS MOST APPROPRIATE TO THE DRIVING CONDITIONS, BASED ON INPUT SIGNALS FROM THE EFI WATER TEMP. SENSOR TO TERMINAL THW OF THE TCCS COMPUTER, AND ALSO THE INPUT SIGNALS TO TERMINAL SP2 OF THE COMPUTER FROM THE SPEED SENSOR DEVOTED TO THE ECT. CURRENT IS THEN OUTPUT TO THE ECT SOLENOIDS. WHEN SHIFTING TO 1ST SPEED, CURRENT FLOWS FROM TERMINAL S1 OF THE COMPUTER → TERMINAL 3 OF THE ECT SOLENOIDS → GROUND, AND CONTINUITY TO THE NO. 1 SOLENOID CAUSES THE SHIFT.

FOR 2ND SPEED, CURRENT FLOWS FROM TERMINAL S1 OF THE COMPUTER → TERMINAL 3 OF THE ECT SOLENOIDS → GROUND, AND FROM TERMINAL S2 OF THE COMPUTER → TERMINAL 2 OF THE ECT SOLENOIDS → GROUND, AND CONTINUITY TO SOLENOIDS NO. 1 AND NO. 2 CAUSES THE SHIFT.

FOR 3RD SPEED, THERE IS NO CONTINUITY TO NO. 1 SOLENOID, ONLY TO NO. 2, CAUSING THE SHIFT.

SHIFTING INTO 4TH SPEED (OVER DRIVE) TAKES PLACE WHEN THERE IS NO CONTINUITY TO EITHER NO. 1 OR NO. 2 SOLENOID.

2. LOCK–UP OPERATION

WHEN THE TCCS COMPUTER JUDGES FROM EACH SIGNAL THAT LOCK–UP OPERATION CONDITIONS HAVE BEEN MET, CURRENT FLOWS FROM TERMINAL SL OF THE TCCS COMPUTER → TERMINAL 1 OF THE ECT SOLENOID → GROUND, CAUSING CONTINUITY TO THE LOCK–UP SOLENOID AND CAUSING LOCK–UP OPERATION.

3. STOP LIGHT SW CIRCUIT

IF THE BRAKE PEDAL IS DEPRESSED (STOP LIGHT SW ON) WHEN DRIVING IN LOCK–UP CONDITION, A SIGNAL IS INPUT TO TERMINAL BK OF THE COMPUTER, THE COMPUTER OPERATES AND CONTINUITY TO THE LOCK–UP SOLENOID IS CUT.

4. OVERDRIVE CIRCUIT

***** O/D MAIN SW ON

WHEN THE O/D MAIN SW IS TURNED ON (O/D OFF INDICATOR LIGHT TURNS OFF), A SIGNAL IS INPUT TO TERMINAL OD2 OF THE COMPUTER AND COMPUTER OPERATION CAUSES GEAR SHIFT WHEN THE CONDITIONS FOR OVERDRIVE ARE MET.

***** O/D MAIN SW OFF

WHEN THE OVERDRIVE SW IS TURNED TO OFF, THE CURRENT FLOWING THROUGH THE O/D OFF INDICATOR LIGHT FLOWS THROUGH THE O/D MAIN SW TO GROUND, CAUSING THE INDICATOR LIGHT TO LIGHT UP. AT THE SAME TIME, A SIGNAL IS INPUT TO TERMINAL OD2 OF THE COMPUTER AND COMPUTER OPERATION PREVENTS SHIFT INTO OVERDRIVE.

5. ECT PATTERN SELECT SW CIRCUIT

IF THE ECT PATTERN SELECT SW IS CHANGED FROM NORMAL TO POWER, THE CURRENT FLOWING THROUGH THE POWER INDICATOR FLOWS TO GROUND, CURRENT FLOWS TO TERMINAL PWR OF THE TCCS COMPUTER, THE COMPUTER OPERATES, AND SHIFT UP AND SHIFT DOWN OCCUR AT HIGHER VEHICLE SPEEDS THAN WHEN THE SW IS IN NORMAL POSITION.

SERVICE HINTS

TCCS ECU (TURN ON THE IGNITION SW)

(E) 19–**(E)** 24 : APPROX. **12** VOLTS WITH SHIFT LEVER AT **D, 2** OR **L** RANGE
0 VOLT WITH SHIFT LEVER AT **P, R** OR **N** RANGE
(E) 7,18–**(E)** 24 : **0** VOLT
(D) 7–**(E)** 24 : APPROX. **12** VOLTS WITH PATTERN SELECT SW AT **PWR** POSITION
0–**2** VOLTS WITH PATTERN SELECT SW AT **NORM** POSITION
(D) 13–**(E)** 24 : APPROX. **12** VOLTS WITH BRAKE PEDAL DEPRESSED
0 VOLT WITH BRAKE PEDAL RELEASED
(D) 4–**(D)** 9 : **0.1**–**1.0** VOLTS WITH COOLANT TEMP. **80**˚C (**176**˚F)
(D) 12–**(D)** 9 : **0** VOLT WITH THROTTLE VALVE FULLY CLOSED
APPROX. **12** VOLTS WITH THROTTLE VALVE OPEN
(D) 11–**(D)** 9 : **0.1**–**1.0** VOLTS WITH THROTTLE VALVE FULLY CLOSED
4–**5** VOLTS WITH THROTTLE VALVE FULLY OPEN
(D) 1–**(D)** 9 : **4**–**6** VOLTS
(F) 21–**(E)** 24 : **5** VOLTS
(F) 20–**(E)** 24 : APPROX. **12** VOLTS O/D MAIN SWITCH TURNED ON
0 VOLT O/D MAIN SWITCH TURNED OFF
(F) 9–**(E)** 24 : **0** OR **5** VOLTS CRUISE CONTROL MAIN SW OFF AND STANDING STILL
2–**3** VOLTS CRUISE CONTROL MAIN SW OFF AND VEHICLE MOVING
(F) 8–**(E)** 24 : **0** OR **5** VOLTS WITH STANDING STILL
2–**3** VOLTS WITH VEHICLE MOVING
(F) 3–**(E)** 24 : **10**–**14** VOLTS WITH SHIFT LEVER A/T **R** RANGE
0–**2** VOLTS WITH SHIFT LEVER AT EXCEPT **R** RANGE
(F) 16–**(E)** 24 : **10**–**14** VOLTS WITH SHIFT LEVER AT **N** RANGE
0–**2** VOLTS WITH SHIFT LEVER AT EXCEPT **N** RANGE
(F) 15–**(E)** 24 : **10**–**14** VOLTS WITH SHIFT LEVER AT **2** RANGE
0–**2** VOLTS WITH SHIFT LEVER AT EXCEPT **2** RANGE
(F) 14–**(E)** 24 : **10**–**14** VOLTS WITH SHIFT LEVER AT **L** RANGE
0–**2** VOLTS WITH SHIFT LEVER AT EXCEPT **L** RANGE
(F) 2–**(E)** 24 : **10**–**14** VOLTS
(F) 1–**(E)** 24 : **10**–**14** VOLTS

(G) ECT SOLENOID
1, 2, 3–GROUND : EACH **11**–**15** Ω

(I) O/D MAIN SW
1–3 : CLOSED WITH O/D MAIN SW OFF OPEN WITH O/D MAIN SW ON

: PARTS LOCATION

CODE		SEE PAGE	CODE		SEE PAGE	CODE		SEE PAGE
A	S9	28	**E**	T4	28	**I**	O1	28
B	E7	28	**F**	T2	28	**J**	C13	28
C	E2	24	**G**	E1	24	**K**	N1	24
D	T3	28	**H**	C1	24	**L**	A26	28

: JUNCTION BLOCK AND WIRE HARNESS CONNECTOR

CODE	SEE PAGE	JUNCTION BLOCK AND WIRE HARNESS (CONNECTOR LOCATION)
1F	18	COWL SUB WIRE AND J/B NO. 1 (LEFT KICK PANEL)
1I	18	COWL WIRE AND J/B NO. 1 (LEFT KICK PANEL)
1L		
2G	20	ENGINE WIRE AND J/B NO. 2 (ENGINE COMPARTMENT LEFT)
3C	22	INSTRUMENT PANEL WIRE AND J/B NO. 3 (INSTRUMENT PANEL LEFT)
3D		

: CONNECTOR JOINING WIRE HARNESS AND WIRE HARNESS

CODE	SEE PAGE	JOINING WIRE HARNESS AND WIRE HARNESS (CONNECTOR LOCATION)
C1	30	ENGINE ROOM MAIN WIRE AND ENGINE WIRE (NEAR J/B NO. 2)
D1	30	ENGINE ROOM MAIN WIRE AND COWL WIRE (LEFT KICK PANEL)
F1	34	INSTRUMENT PANEL WIRE AND COWL SUB WIRE (LEFT KICK PANEL)
K1	34	ENGINE WIRE AND COWL WIRE (BEHIND GLOVE BOX)
L1	34	ENGINE WIRE AND INSTRUMENT PANEL WIRE (BEHIND GLOVE BOX)

ECT AND A/T INDICATOR (2VZ–FE)

▽ : GROUND POINTS

CODE	SEE PAGE	GROUND POINTS LOCATION
B	30	INTAKE MANIFOLD
D	34	J/B NO. 1 SET BOLT
E	34	LEFT KICK PANEL

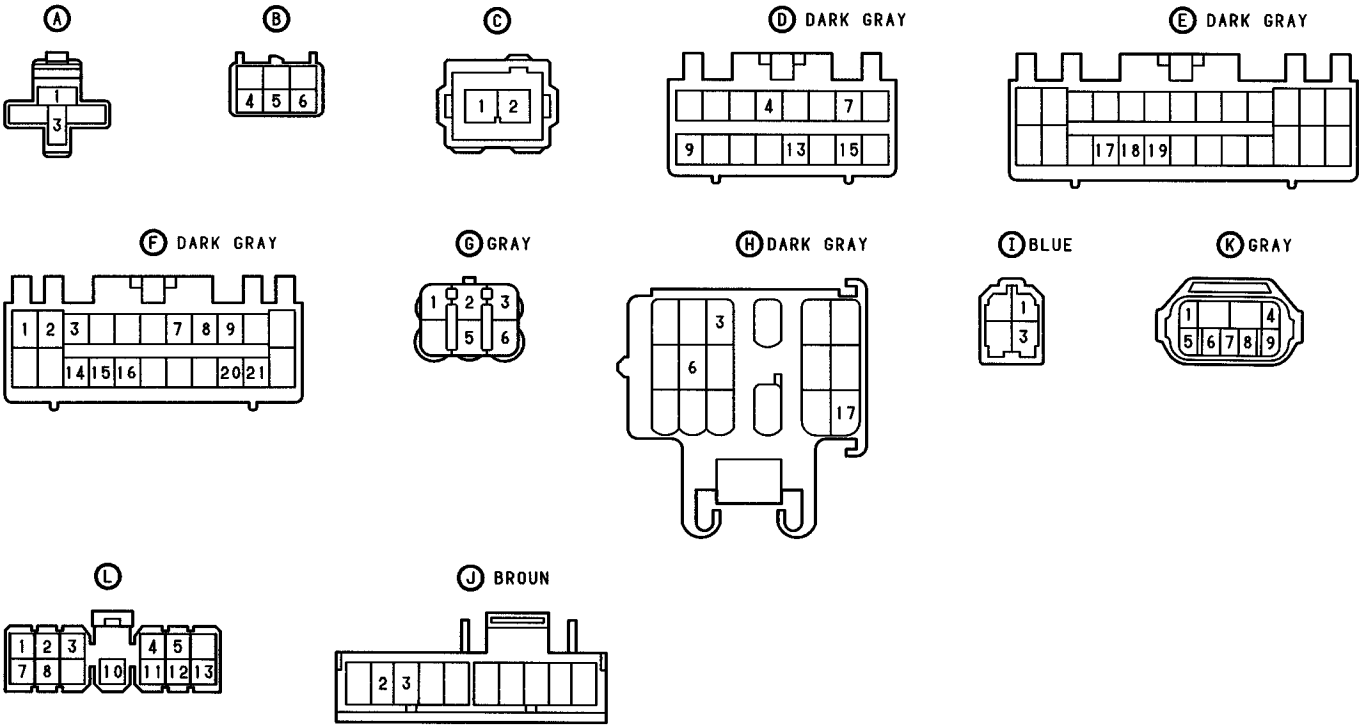

SYSTEM OUTLINE

PREVIOUS AUTOMATIC TRANSMISSIONS HAVE SELECTED EACH GEAR SHIFT USING MECHANICALLY CONTROLLED THROTTLE HYDRAULIC PRESSURE, GOVERNOR HYDRAULIC PRESSURE AND LOCK–UP HYDRAULIC PRESSURE. THE ECT, HOWEVER, ELECTRICALLY CONTROLS THE LINE PRESSURE AND LOCK–UP PRESSURE ETC., THROUGH THE SOLENOID VALVE. ECT COMPUTER CONTROL OF THE SOLENOID VALVE BASED ON THE INPUT SIGNALS FROM EACH SENSOR MAKES SMOOTH DRIVING POSSIBLE BY SHIFT SELECTION FOR EACH GEAR WHICH IS MOST APPROPRIATE TO THE DRIVING CONDITIONS AT THAT TIME.

1. GEAR SHIFT OPERATION

DURING DRIVING, THE COMPUTER SELECTS THE SHIFT FOR EACH GEAR WHICH IS MOST APPROPRIATE TO THE DRIVING CONDITIONS, BASED ON INPUT SIGNALS FROM THE TCCS ECU TO TERMINALS IDL, L1, L2 AND L3 OF THE ECT COMPUTER, AND ALSO THE INPUT SIGNALS TO TERMINAL SP2 (FWD), OF THE COMPUTER FROM THE SPEED SENSOR. CURRENT IS THEN OUTPUT TO THE ECT SOLENOIDS. WHEN SHIFTING TO 1ST SPEED, CURRENT FLOWS FROM TERMINAL S1 OF THE COMPUTER → TERMINAL 3 (FWD), 2 (4WD) OF THE ECT SOLENOIDS → GROUND, AND CONTINUITY TO THE NO. 1 SOLENOID CAUSES THE SHIFT.

FOR 2ND SPEED, CURRENT FLOWS FROM TERMINAL S1 OF THE COMPUTER → TERMINAL 3 (FWD), 2 (4WD) OF THE ECT SOLENOIDS → GROUND, AND FROM TERMINAL S2 OF THE COMPUTER → TERMINAL 2 (FWD), 1 (4WD) OF THE ECT SOLENOIDS → GROUND, AND CONTINUITY TO SOLENOIDS NO. 1 AND NO. 2 CAUSES THE SHIFT.

FOR 3RD SPEED, THERE IS NO CONTINUITY TO NO. 1 SOLENOID, ONLY TO NO. 2, CAUSING THE SHIFT. SHIFTING INTO 4TH SPEED (OVERDRIVE) TAKES PLACE WHEN THERE IS NO CONTINUITY TO EITHER NO. 1 OR NO. 2 SOLENOID.

2. LOCK–UP OPERATION

WHEN THE ECT COMPUTER JUDGES FROM EACH SIGNAL THAT LOCK–UP OPERATION CONDITIONS HAVE BEEN MET, CURRENT FLOWS FROM TERMINAL SL OF THE ECT COMPUTER → TERMINAL 1 (FWD), 3 (4WD) OF THE ECT SOLENOID → GROUND, CAUSING CONTINUITY TO THE LOCK–UP SOLENOID AND CAUSING LOCK–UP OPERATION.

3. STOP LIGHT SW CIRCUIT

IF THE BRAKE PEDAL IS DEPRESSED (STOP LIGHT SW ON) WHEN DRIVING IN LOCK–UP CONDITION, A SIGNAL IS INPUT TO TERMINAL BK OF THE COMPUTER, THE COMPUTER OPERATES AND CONTINUITY TO THE LOCK–UP SOLENOID IS CUT.

4. OVERDRIVE CIRCUIT

***** O/D MAIN SW ON

WHEN THE O/D MAIN SW IS TURNED ON (O/D OFF INDICATOR LIGHT TURNS OFF), A SIGNAL IS INPUT TO TERMINAL OD2 OF THE COMPUTER AND COMPUTER OPERATION CAUSES GEAR SHIFT WHEN THE CONDITIONS FOR OVERDRIVE ARE MET.

***** O/D MAIN SW OFF

WHEN THE OVERDRIVE SW IS TURNED TO OFF, THE CURRENT FLOWING THROUGH THE O/D OFF INDICATOR LIGHT FLOWS THROUGH THE O/D MAIN SW TO GROUND, CAUSING THE INDICATOR LIGHT TO LIGHT UP. AT THE SAME TIME, A SIGNAL IS INPUT TO TERMINAL OD2 OF THE COMPUTER AND COMPUTER OPERATION PREVENTS SHIFT INTO OVERDRIVE.

5. ECT PATTERN SELECT SW CIRCUIT

IF THE ECT PATTERN SELECT SW IS CHANGED FROM NORMAL TO POWER, THE CURRENT FLOWING THROUGH THE POWER INDICATOR FLOWS TO GROUND, CURRENT FLOWS TO TERMINAL PWR OF THE ECT COMPUTER, THE COMPUTER OPERATES, AND SHIFT UP AND SHIFT DOWN OCCUR AT HIGHER VEHICLE SPEEDS THAN WHEN THE SW IS IN NORMAL POSITION.

ECT AND A/T INDICATOR (3S–FE)

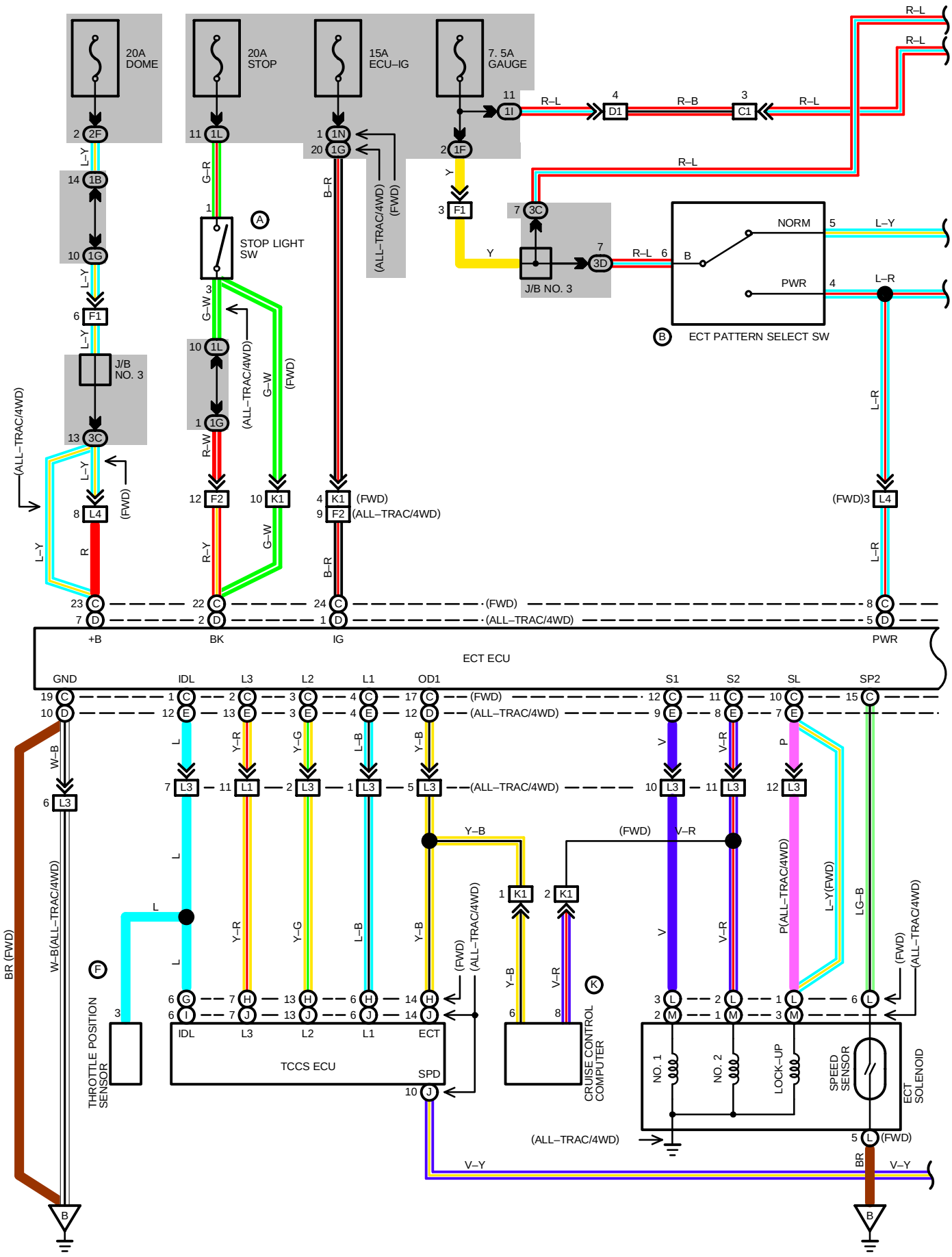

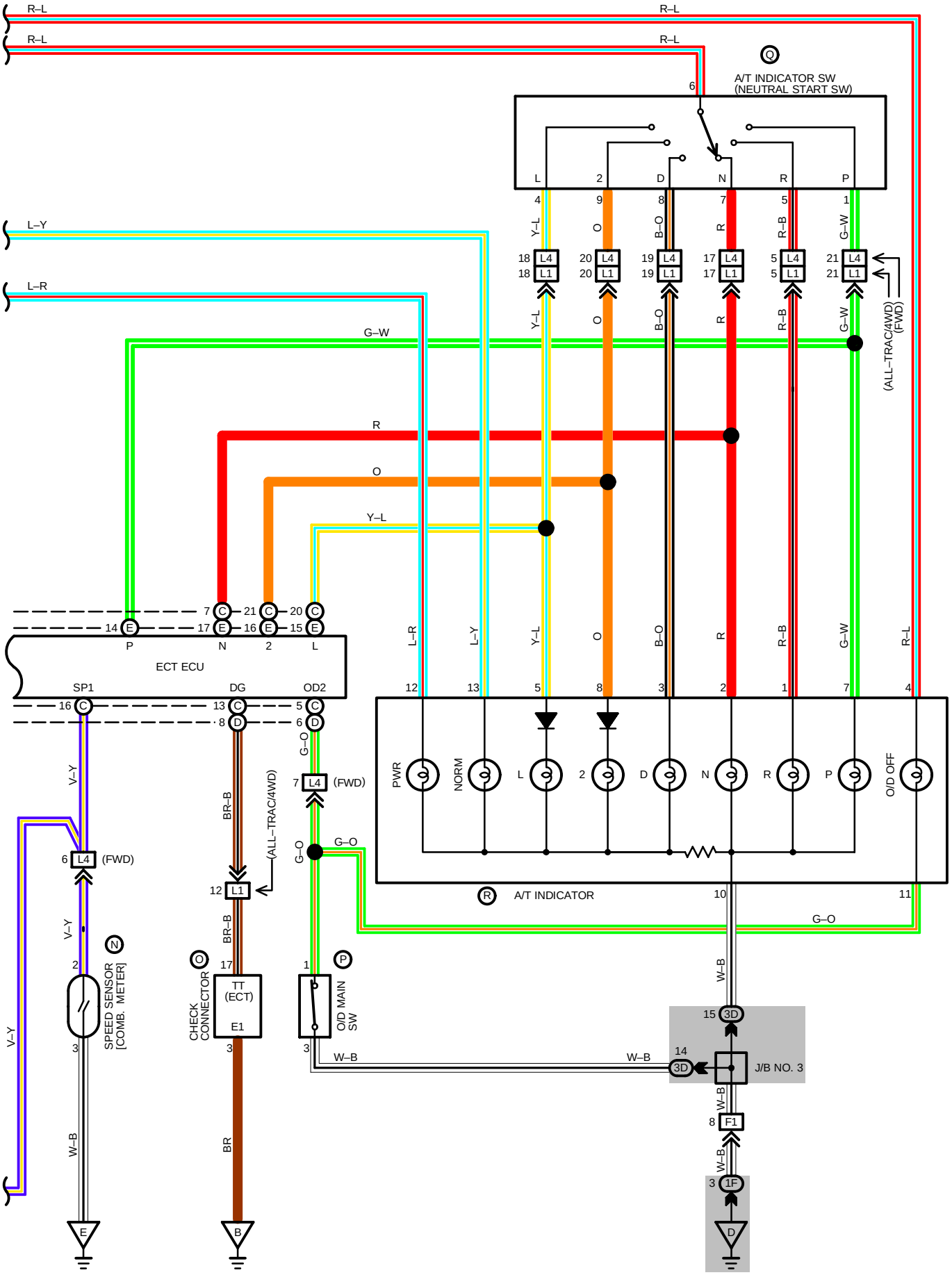
R–L
L–Y
L–R
G–W
R
O
Y–L
A/T INDICATOR SW
(NEUTRAL START SW)
L
2
D
N
R
P
(ALL–TRAC/4WD)
(FWD)
ECT ECU
SP1
DG
OD2
PWR
NORM
A/T INDICATOR
O/D OFF
(FWD)
(ALL–TRAC/4WD)
V–Y
W–B
BR–B
BR
G–O
SPEED SENSOR
[COMB. METER]
CHECK
CONNECTOR
TT
(ECT)
E1
O/D MAIN
SW
J/B NO. 3
3D
F1
1F
E
B
D

ECT AND A/T INDICATOR (3S–FE)

SERVICE HINTS

ECT ECU (ELECTRICAL CONTROLED UNIT) (IGNITION SW ON)

(C) 19, **(D)** 10–GROUND : ALWAYS CONTINUITY
(C) 2, **(E)** 13–GROUND : **5 (12)** → **0** → **5 (12)** → **0** → **5 (12)** VOLTS
(C) 3, **(E)** 3–GROUND : **5 (12)** → **0** → **5 (12)** VOLTS
(C) 4, **(E)** 4–GROUND : **5 (12)** → **0** VOLTS
(C) 1–19, **(D)** 12–10 : **0** VOLT WITH THROTTLE VALVE FULLY CLOSED
APPROX. **12** VOLTS WITH THROTTLE VALVE OPENING ABOVE **1.5**˚
(C) 16–19 : APPROX. **12** VOLTS OR **0** VOLT WITH STANDING STILL
6 VOLTS WITH ENGINE RUNNING VEHICLE MOVING (FWD)
(C) 22–19, **(D)** 2–10 : APPROX. **12** VOLTS WITH BRAKE PEDAL DEPRESSED
0 VOLT WITH BRAKE PEDAL NOT DEPRESSED
(C) 21–19, **(E)** 16–**(D)** 10 : **10** TO **16** VOLTS WITH SHIFT LEVER AT **2** POSITION
0 TO **2** VOLTS WITH SHIFT LEVER EXCEPT **2** POSITION
(C) 20–19, **(E)** 15–**(D)** 10 : **10** TO **16** VOLTS WITH SHIFT LEVER AT **L** POSITION
0 TO **2** VOLTS WITH SHIFT LEVER EXCEPT **L** POSITION
(C) 12–19, **(E)** 9–**(D)** 10 : APPROX. **12** VOLTS
(C) 10, 11–19, **(E)** 7, 8–**(D)** 10 : **0** VOLT
(C) 5–19, **(D)** 6–10 : **5** (**12**) VOLTS WITH O/D MAIN SW ON
0 VOLT WITH O/D MAIN SW OFF
(C) 24–19, **(D)** 1–10 : APPROX. **12** VOLTS WITH STANDING STILL
: **5** OR **0** VOLTS WITH STANDING STILL
4 VOLTS WITH ENGINE RUNNING (FWD)
(C) 8–19, **(D)** 5–10 : APPROX. **12** VOLTS WITH PATTERN SELECT SW AT **PWR** POSITION
0 TO **2** VOLTS WITH PATTERN SELECT AT **NORM** POSITION
(C) 23–19, **(D)** 7–10 : APPROX. **12** VOLTS
(C) 17, **(D)** 12–GROUND : **0** VOLTS WITH COOLANT TEMP. BELOW **70**˚C (**158**˚F)
5 (12) VOLTS WITH COOLANT TEMP. MORE THAN **70**˚C (**158**˚F)
( ): AISIN COMPUTER

(L) (M) ECT SOLENOID
1, 2, 3–GROUND : EACH **11**–**15** Ω

(P) O/D MAIN SW
1–3 : CLOSED WITH O/D MAIN SW OFF OPEN WITH O/D MAIN SW ON

○ : PARTS LOCATION

CODE		SEE PAGE	CODE		SEE PAGE	CODE		SEE PAGE
A	S9	28	**G**	T3	28 (FWD)	**M**	E1	25 (ALL–TRAC/4WD)
B	E7	28	**H**	T2	28 (FWD)	**N**	C13	28
C	E4	28 (FWD)	**I**	T3	28 (ALL–TRAC/4WD)	**O**	C1	25
D	E5	28 (ALL–TRAC/4WD)	**J**	T2	28 (ALL–TRAC/4WD)	**P**	O1	28
E	E6	28 (ALL–TRAC/4WD)	**K**	C17	28	**Q**	N1	25
F	T1	25	**L**	E1	25 (FWD)	**R**	A26	28

⬭ : JUNCTION BLOCK AND WIRE HARNESS CONNECTOR

CODE	SEE PAGE	JUNCTION BLOCK AND WIRE HARNESS (CONNECTOR LOCATION)
1B	18	ENGINE ROOM MAIN WIRE AND J/B NO. 1 (LEFT KICK PANEL)
1F	18	COWL SUB WIRE AND J/B NO. 1 (LEFT KICK PANEL)
1G		
1I	18	COWL WIRE AND J/B NO. 1 (LEFT KICK PANEL)
1L		
1N		
2F	20	ENGINE ROOM MAIN WIRE AND J/B NO. 2 (ENGINE COMPARTMENT LEFT)
3C	22	INSTRUMENT PANEL WIRE AND J/B NO. 3 (INSTRUMENT PANEL LEFT)
3D		

: CONNECTOR JOINING WIRE HARNESS AND WIRE HARNESS

CODE	SEE PAGE	JOINING WIRE HARNESS AND WIRE HARNESS (CONNECTOR LOCATION)
C1	32	ENGINE ROOM MAIN WIRE AND ENGINE WIRE (NEAR J/B NO. 2)
D1	32	ENGINE ROOM MAIN WIRE AND COWL WIRE (LEFT KICK PANEL)
F1	34	INSTRUMENT PANEL WIRE AND COWL SUB WIRE (LEFT KICK PANEL)
F2		
I1	34	COWL WIRE AND INSTRUMENT PANEL WIRE (NSTRUMENT PANEL CENTER)
K1	34	ENGINE WIRE AND COWL WIRE (BEHIND GLOVE BOX)
L1	34	ENGINE WIRE AND INSTRUMENT PANEL WIRE (BEHIND GLOVE BOX)
L3		
L4		

: GROUND POINTS

CODE	SEE PAGE	GROUND POINTS LOCATION
B	32	INTAKE MANIFOLD
D	34	J/B NO. 1 SET BOLT
E	34	LEFT KICK PANEL

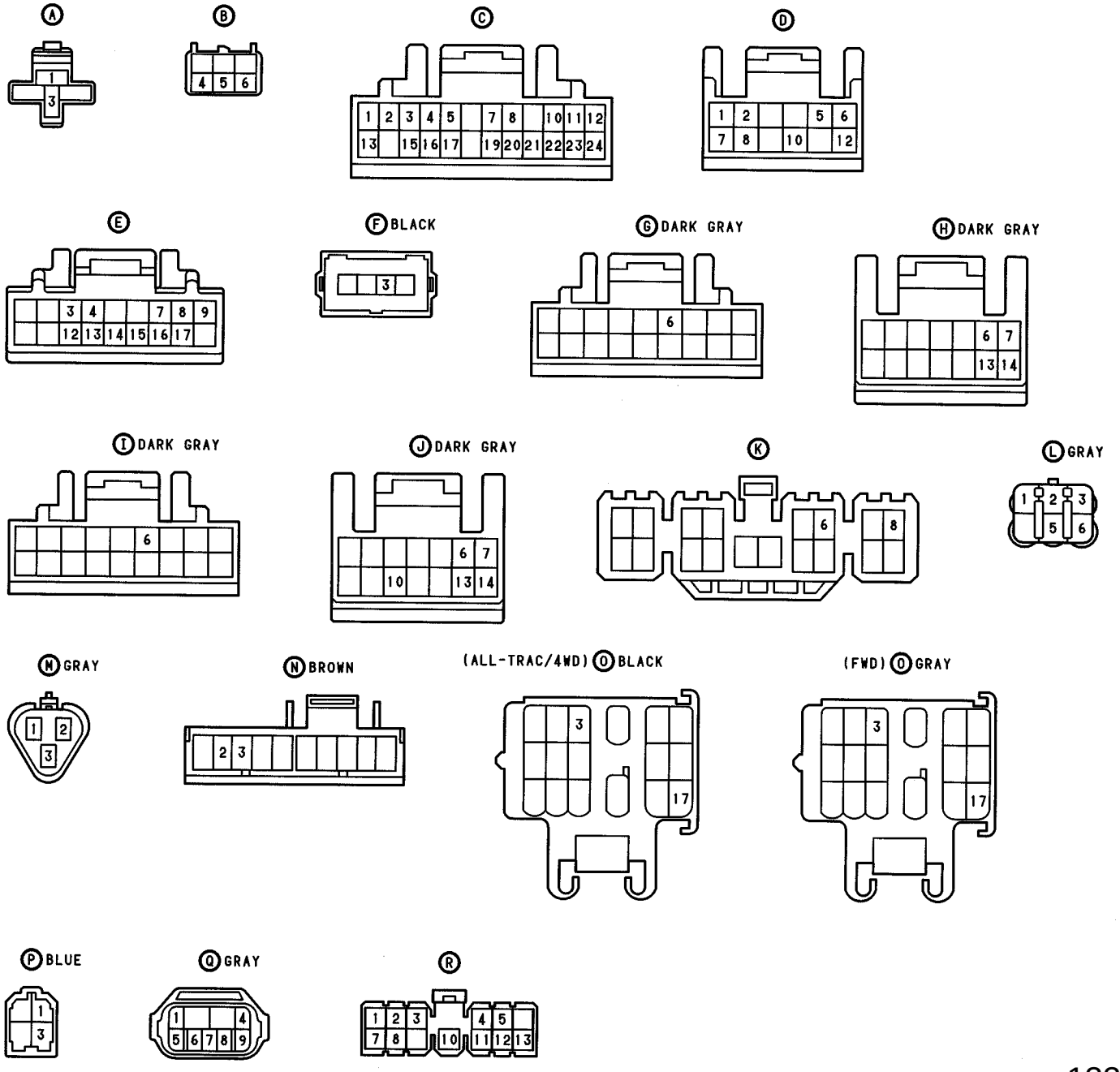

OVER DRIVE

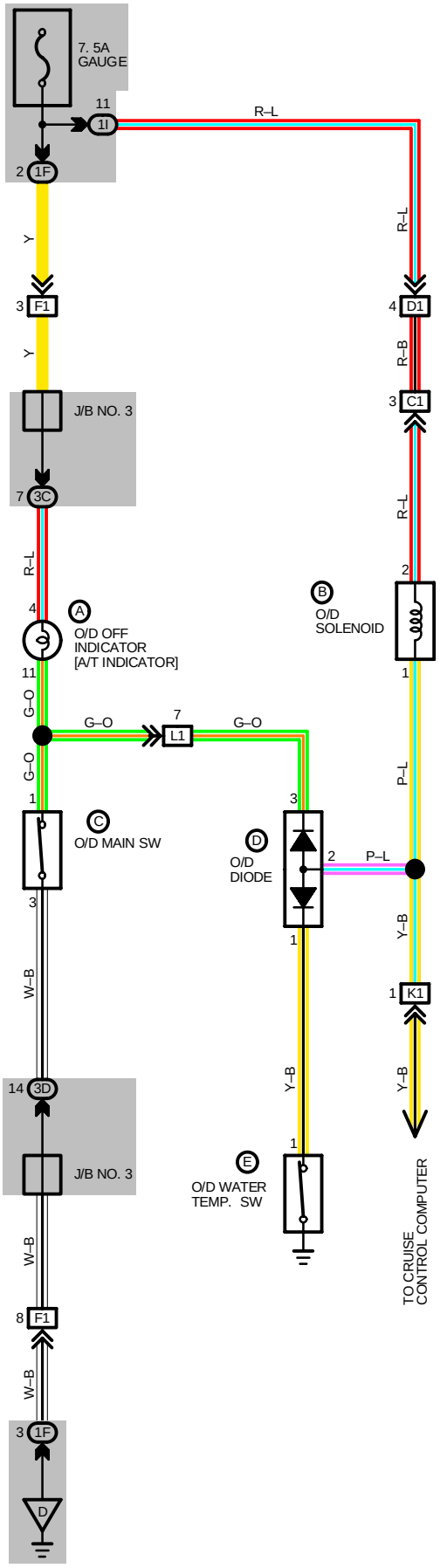

SERVICE HINTS

(B) O/D SOLENOID
1–GROUND : APPROX. **13** Ω

(C) O/D MAIN SW
1–3 : CLOSED WITH O/D SW AT **OFF** POSITION
OPEN WITH O/D SW AT **ON** POSITION

(E) O/D WATER TEMP SW
1–GROUND : CLOSED BELOW **43**˚ C (**109**˚ F)
OPEN ABOVE **55**˚ C (**131**˚ F)

: PARTS LOCATION

CODE		SEE PAGE	CODE		SEE PAGE	CODE		SEE PAGE
A	A26	28	**C**	O1	28	**E**	O2	25
B	E1	25	**D**	D11	28			

: JUNCTION BLOCK AND WIRE HARNESS CONNECTOR

CODE	SEE PAGE	JUNCTION BLOCK AND WIRE HARNESS (CONNECTOR LOCATION)
1F	18	COWL SUB WIRE AND J/B NO. 1 (LEFT KICK PANEL)
1I	18	COWL WIRE AND J/B NO. 1 (LEFT KICK PANEL)
3C	22	INSTRUMENT PANEL WIRE AND J/B NO. 3 (INSTRUMENT PANEL LEFT)
3D		

: CONNECTOR JOINING WIRE HARNESS AND WIRE HARNESS

CODE	SEE PAGE	JOINING WIRE HARNESS AND WIRE HARNESS (CONNECTOR LOCATION)
C1	32	ENGINE ROOM MAIN WIRE AND ENGINE WIRE (NEAR J/B NOO. 2)
D1	32	ENGINE ROOM MAIN WIRE AND COWL WIRE (LEFT KICK PANEL)
F1	34	INSTRUMENT PANEL WIRE AND COWL WIRE (LEFT KICK PANEL)
K1	34	ENGINE WIRE AND COWL WIRE (BEHIND GLOVE BOX)
L1	34	ENGINE WIRE AND INSTRUMENT PANEL WIRE (BEHIND GLOVE BOX)

: GROUND POINTS

CODE	SEE PAGE	GROUND POINTS LOCATION
D	34	J/B NO. 1 SET BOLT

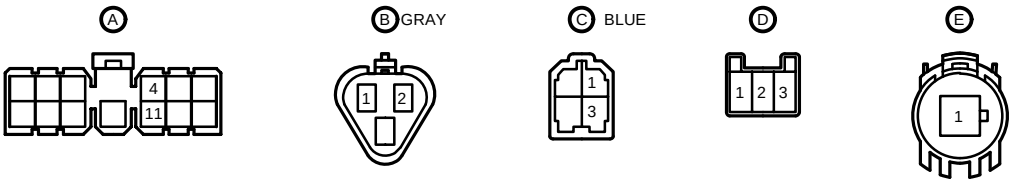

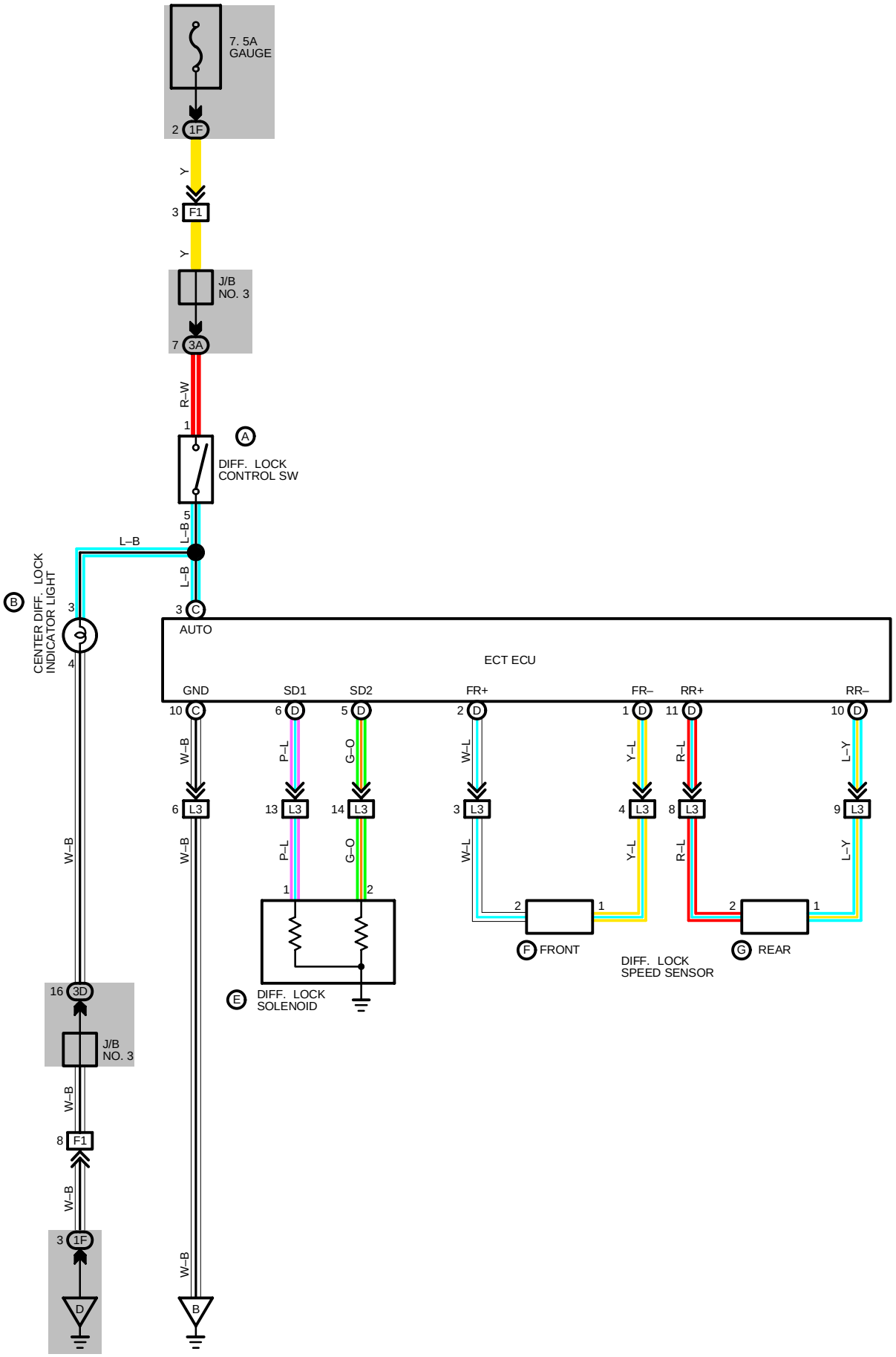
7. 5A
GAUGE
2 1F
Y
3 F1
Y
J/B
NO. 3
7 3A
R–W
1
A
DIFF. LOCK
CONTROL SW
5
L–B
L–B
L–B
3 C
AUTO
B
CENTER DIFF. LOCK
INDICATOR LIGHT
3
4
ECT ECU
GND
SD1
SD2
FR+
FR–
RR+
RR–
10 C
6 D
5 D
2 D
1 D
11 D
10 D
W–B
P–L
G–O
W–L
Y–L
R–L
L–Y
6 L3
13 L3
14 L3
3 L3
4 L3
8 L3
9 L3
W–B
P–L
G–O
W–L
Y–L
R–L
L–Y
1
2
2
1
2
1
2
1
E
DIFF. LOCK
SOLENOID
F
FRONT
DIFF. LOCK
SPEED SENSOR
G
REAR
W–B
16 3D
J/B
NO. 3
W–B
8 F1
W–B
3 1F
D
W–B
B

SERVICE HINTS

ECT ECU

(C) 3–GROUND : APPROX. **12** VOLTS WITH IGNITION SW ON AND CLOSED WITH DIFF. LOCK CONTROL SW
10–GROUND : ALWAYS CONTINUITY

: PARTS LOCATION

CODE		SEE PAGE	CODE		SEE PAGE	CODE		SEE PAGE
A	R7	28	**D**	E6	28	**G**	D6	25
B	C6	28	**E**	D2	25			
C	E5	28	**F**	D5	25			

: JUNCTION BLOCK AND WIRE HARNESS CONNECTOR

CODE	SEE PAGE	JUNCTION BLOCK AND WIRE HARNESS (CONNECTOR LOCATION)
1F	18	COWL SUB WIRE AND J/B NO. 1 (LEFT KICK PANEL)
3A	22	INSTRUMENT PANEL WIRE AND J/B NO. 3 (INSTRUMENT PANEL LEFT)
3D		

: CONNECTOR JOINING WIRE HARNESS AND WIRE HARNESS

CODE	SEE PAGE	JOINING WIRE HARNESS AND WIRE HARNESS (CONNECTOR LOCATION)
F1	34	INSTRUMENT PANEL WIRE AND COWL SUB WIRE (LEFT KICK PANEL)
L3	34	ENGINE WIRE AND INSTRUMENT PANEL WIRE (BEHIND GLOVE BOX)

: GROUND POINTS

CODE	SEE PAGE	GROUND POINTS LOCATION
B	32	INTAKE MANIFOLD
D	34	J/B NO. 1 SET BOLT

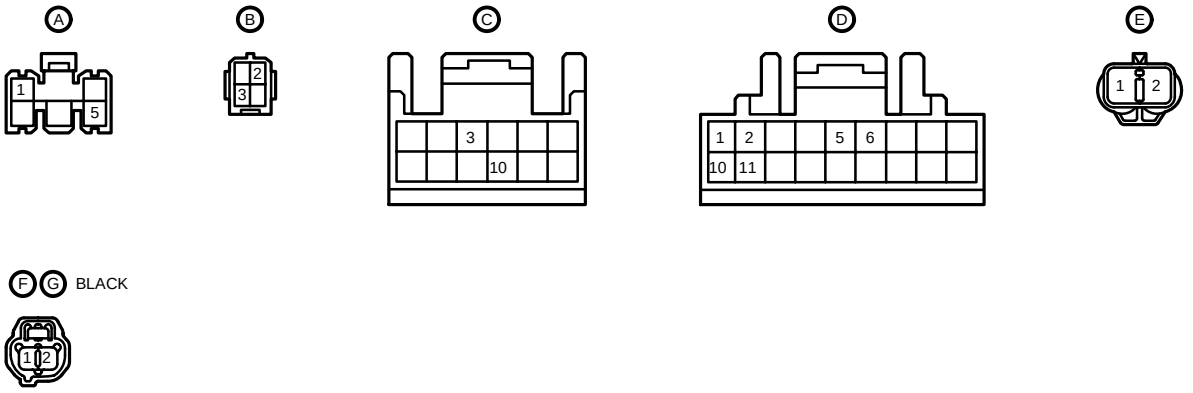

ALL–TRAC/4WD SYSTEM (W/O ECT)

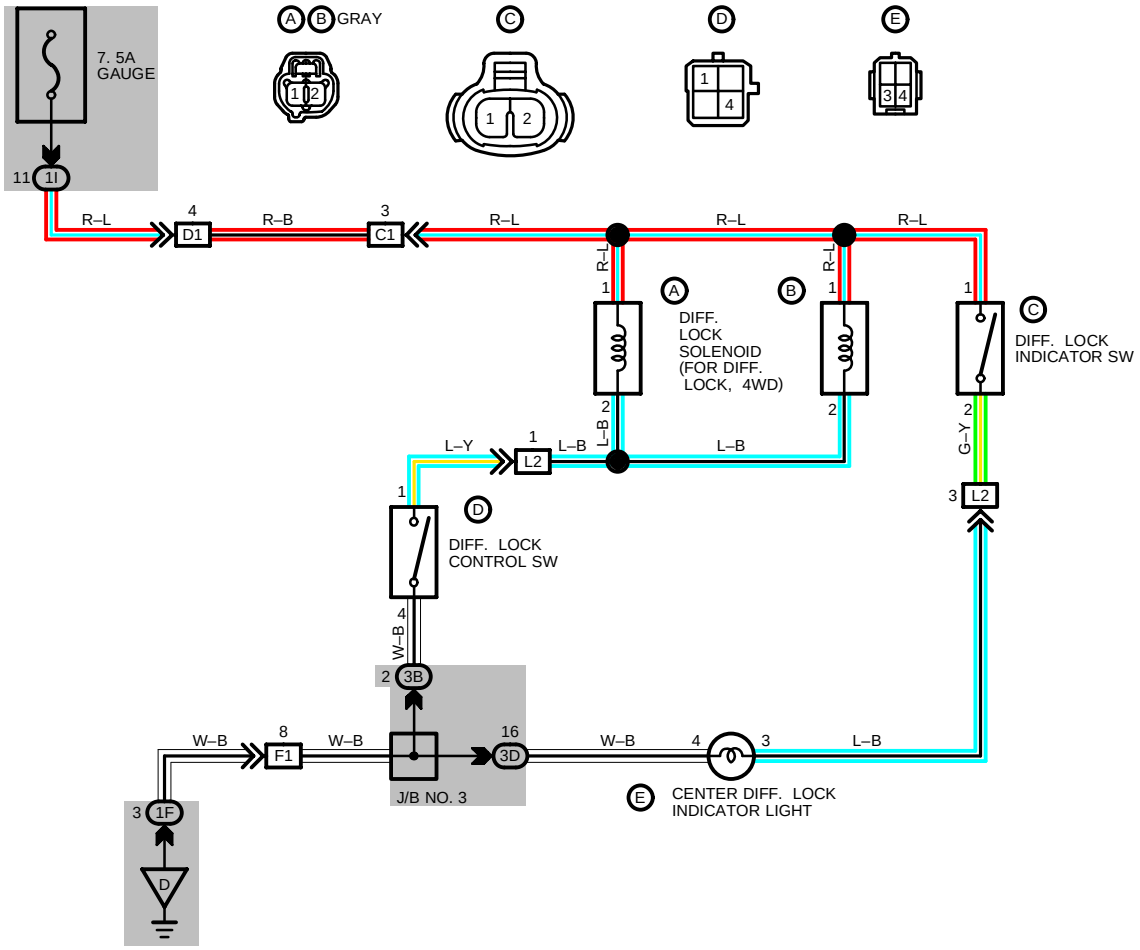

SERVICE HINTS

(A) (B) DIFF. LOCK SOLENOID
1–GROUND : APPROX. **12** VOLTS WITH IGNITION SW AT **ON** POSITION
(C) DIFF. LOCK INDICATOR SW
1–2 : CLOSED WITH DIFF. LOCK INDICATOR SW ON
1–GROUND : APPROX. **12** VOLTS WITH IGNITION SW AT **ON** POSITION

: PARTS LOCATION

CODE		SEE PAGE	CODE		SEE PAGE	CODE		SEE PAGE
A	D3	25	**C**	D1	25	**E**	C6	28
B	D4	25	**D**	R7	28			

: JUNCTION BLOCK AND WIRE HARNESS CONNECTOR

CODE	SEE PAGE	JUNCTION BLOCK AND WIRE HARNESS (CONNECTOR LOCATION)
1F	18	COWL SUB WIRE AND J/B NO. 1 (LEFT KICK PANEL)
1I	18	COWL WIRE AND J/B NO. 1 (LEFT KICK PANEL)
3B	22	INSTRUMENT PANEL WIRE AND J/B NO. 3 (INSTRUMENT PANEL LEFT)
3D	22	

: CONNECTOR JOINING WIRE HARNESS AND WIRE HARNESS

CODE	SEE PAGE	JOINING WIRE HARNESS AND WIRE HARNESS (CONNECTOR LOCATION)
C1	32	ENGINE ROOM MAIN WIRE AND ENGINE ROOM NO. 4 WIRE (NEAR J/B NO. 2)
D1	32	ENGINE ROOM MAIN WIRE AND COWL WIRE (LEFT KICK PANEL)
F1	34	INSTRUMENT PANEL WIRE AND COWL SUB WIRE (LEFT KICK PANEL)
L2	34	ENGINE WORE AND INSTRUMENT PANEL WIRE (BEHIND GLOVE BOX)

: GROUND POINTS

CODE	SEE PAGE	GROUND POINTS LOCATION
D	34	J/B NO. 1 SET BOLT

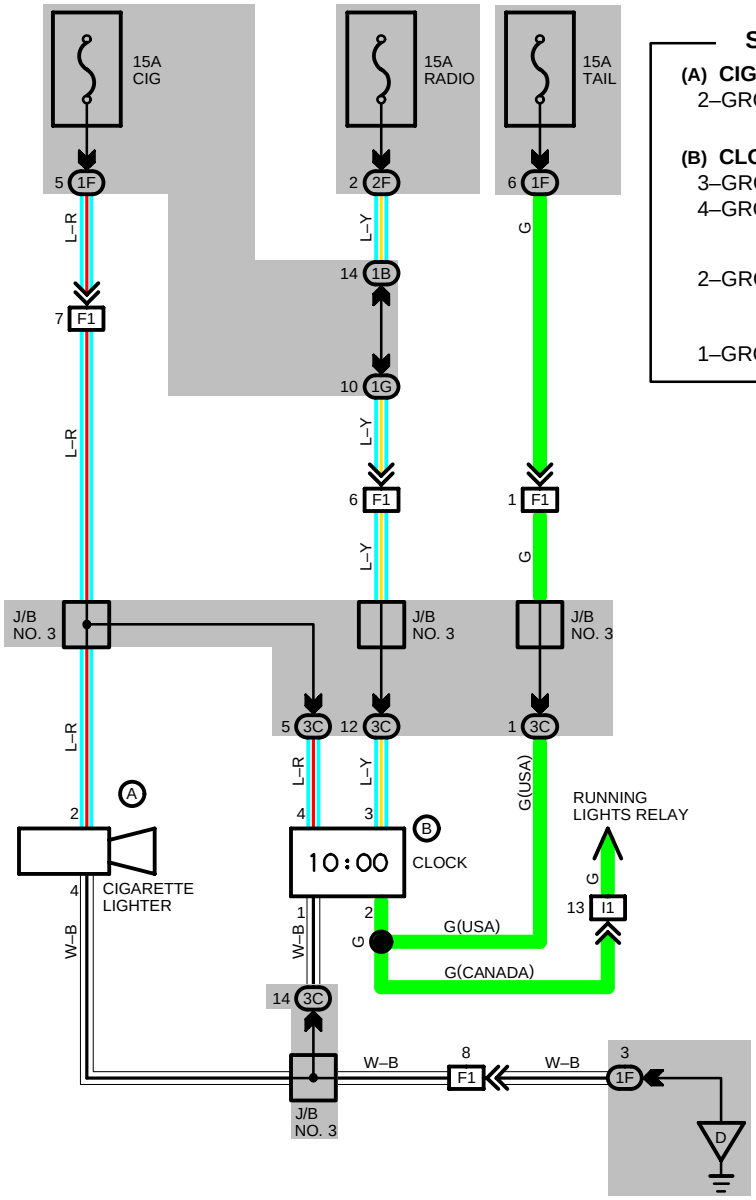

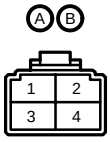

SERVICE HINTS

(A) CIGARETTE LIGHTER

2–GROUND : APPROX. **12** VOLTS WITH IGNITION SW AT **ON** OR **ACC** POSITION

(B) CLOCK

3–GROUND : ALWAYS **12** VOLTS (POWER FOR CLOCK)

4–GROUND : APPROX. **12** VOLTS WITH IGNITION SW AT **ON** OR **ACC** POSITION (POWER FOR INDICATION)

2–GROUND : **12** VOLTS WITH LIGHT CONTROL SW AT **TAIL** OR **HEAD** POSITION (SIGNAL OF DIM INDICATION)

1–GROUND : ALWAYS CONTINUITY

: PARTS LOCATION

CODE		SEE PAGE	CODE		SEE PAGE	CODE		SEE PAGE
A	C7	28	**B**	C9	28			

: JUNCTION BLOCK AND WIRE HARNESS CONNECTOR

CODE	SEE PAGE	JUNCTION BLOCK AND WIRE HARNESS (CONNECTOR LOCATION)
1B	18	ENGINE ROOM MAIN WIRE AND J/B NO. 1 (LEFT KICK PANEL)
1F	18	COWL SUB WIRE AND J/B NO. 1 (LEFT KICK PANEL)
1G		
2F	20	ENGINE ROOM MAIN WIRE AND J/B NO. 2 (ENGINE COMPARTMENT LEFT)
3C	22	INSTRUMENT PANEL WIRE AND J/B NO. 3 (INSTRUMENT PANEL LEFT)

: CONNECTOR JOINING WIRE HARNESS AND WIRE HARNESS

CODE	SEE PAGE	JOINING WIRE HARNESS AND WIRE HARNESS (CONNECTOR LOCATION)
F1	34	INSTRUMENT PANEL WIRE AND COWL SUB WIRE (LEFT KICK PANEL)
I1	34	COWL WIRE AND INSTRUMENT PANEL WIRE (INSTRUMENT PANEL CENTER)

: GROUND POINTS

CODE	SEE PAGE	GROUND POINTS LOCATION
D	34	J/B NO. 1 SET BOLT

SHIFT LOCK

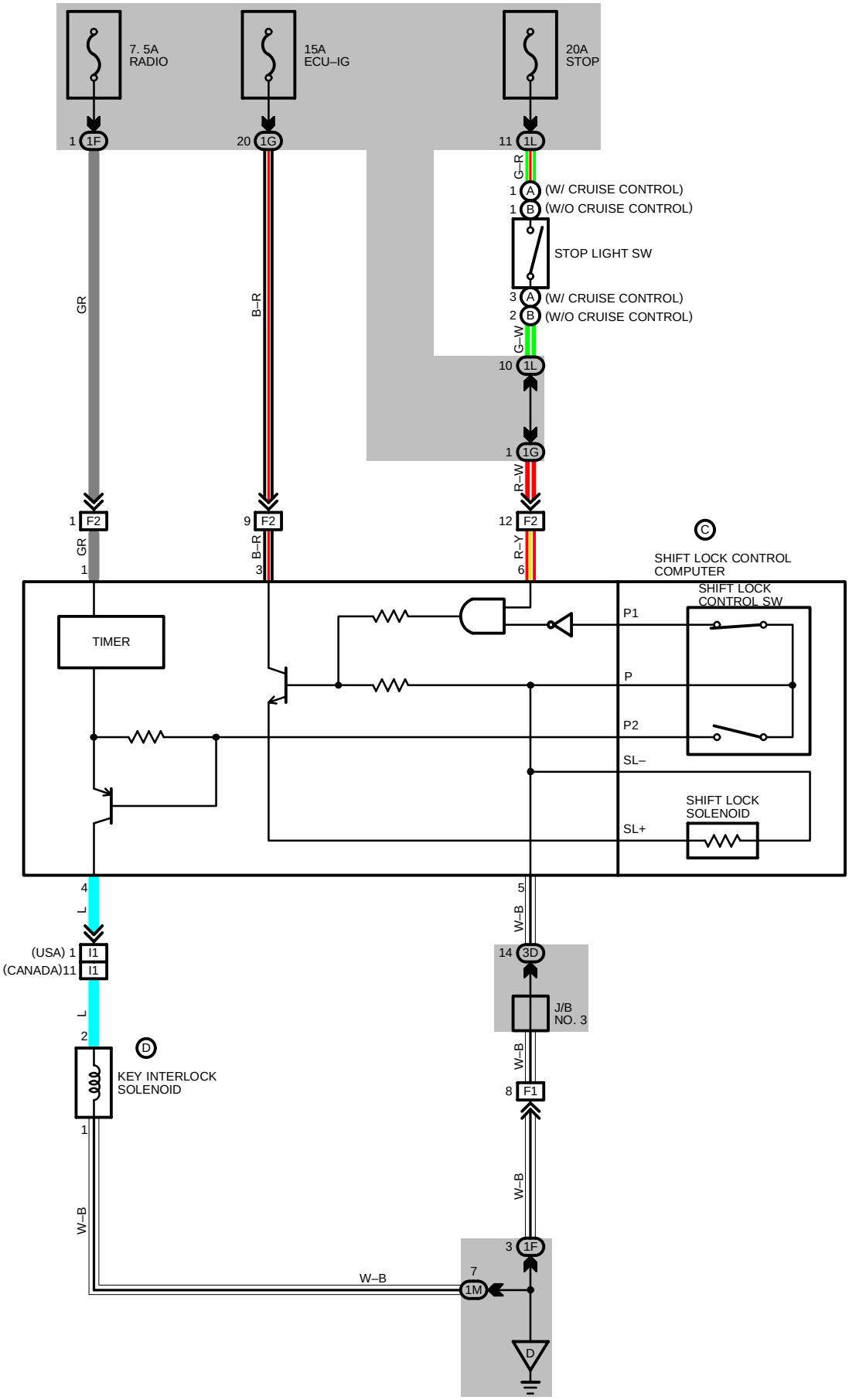
7. 5A
RADIO
15A
ECU–IG
20A
STOP
1 1F
20 1G
11 1L
G–R
1 A (W/ CRUISE CONTROL)
1 B (W/O CRUISE CONTROL)
STOP LIGHT SW
3 A (W/ CRUISE CONTROL)
2 B (W/O CRUISE CONTROL)
G–W
10 1L
1 1G
R–W
GR
B–R
1 F2
9 F2
12 F2
GR 1
B–R 3
R–Y 6
C
SHIFT LOCK CONTROL COMPUTER
SHIFT LOCK CONTROL SW
TIMER
P1
P
P2
SL–
SHIFT LOCK SOLENOID
SL+
4 L
5 W–B
(USA) 1 I1
(CANADA)11 I1
14 3D
J/B NO. 3
L 2
D
KEY INTERLOCK SOLENOID
W–B
8 F1
1
W–B
W–B
3 1F
7 1M
W–B
D

SYSTEM OUTLINE

WHEN THE IGNITION SW IS TURNED TO ACC POSITION THE CURRENT FROM THE RADIO FUSE FLOWS TO TERMINAL 1 OF THE SHIFT LOCK CONTROL COMPUTER, IN THE ON POSITION, THE CURRENT FROM THE ECU–IG FUSE FLOWS TO TERMINAL 3 OF THE COMPUTER.

1. SHIFT LOCK MECHANISM

WITH THE IGNITION SW ON, WHEN A SIGNAL THAT THE BRAKE PEDAL IS DEPRESSED (STOP LIGHT SW ON) AND A SIGNAL THAT THE SHIFT LEVER IS PUT IN “P” RANGE (CONTINUITY BETWEEN P1 AND P OF THE SHIFT POSITION SW) IS INPUT TO THE COMPUTER, THE COMPUTER OPERATES AND CURRENT FLOWS FROM TERMINAL 3 OF THE COMPUTER → TERMINAL SL+ OF THE SHIFT LOCK SOLENOID → SOLENOID → TERMINAL SL– → TERMINAL 5 OF THE COMPUTER → GROUND. THIS CAUSES THE SHIFT LOCK SOLENOID TO TURN ON (PLATE STOPPER DISENGAGES) AND THE SHIFT LEVER CAN SHIFT INTO OTHER RANGE THAN THE “P” RANGE.

2. KEY INTER LOCK MECHANISM

WITH THE IGNITION SW IN ON OR ACC POSITION, WHEN THE SHIFT LEVER IS PUT IN “P” RANGE (NO CONTINUITY BETWEEN P2 AND P OF LOCK CONTROL SW), THE CURRENT FLOWING FROM TERMINAL 4 OF THE COMPUTER → KEY INTER LOCK SOLENOID IS CUT OFF. THIS CAUSES THE KEY INTER LOCK SOLENOID TO TURN OFF (LOCK LEVER DISENGAGES FROM LOCK POSITION) AND THE IGNITION KEY CAN BE TURNED FROM ACC TO LOCK POSITION. IF THE IGNITION IS LEFT IN ACC OR ON POSITION WITH THE SHIFT LEVER IN OTHER THAN “P” RANGE, THEN AFTER APPROX. ONE HOUR THE COMPUTER OPERATES TO RELEASE THE LOCK.

SERVICE HINTS

(C) SHIFT LOCK CONTROL COMPUTER

1–GROUND : APPROX. **12** VOLTS WITH IGNITION SW AT **ACC** OR **ON** POSITION
3–GROUND : APPROX. **12** VOLTS WITH IGNITION SW AT **ON** POSITION
5–GROUND : ALWAYS CONTINUITY
6–GROUND : APPROX. **12** VOLTS WITH BRAKE PEDAL DEPRESSED

: PARTS LOCATION

CODE		SEE PAGE	CODE		SEE PAGE	CODE		SEE PAGE
A	S9	28	**C**	S6	28			
B	S9	28	**D**	K1	28			

: JUNCTION BLOCK AND WIRE HARNESS CONNECTOR

CODE	SEE PAGE	JUNCTION BLOCK AND WIRE HARNESS (CONNECTOR LOCATION)
1F	18	COWL SUB WIRE AND J/B NO. 1 (LEFT KICK PANEL)
1G		
1L	18	COWL WIRE AND J/B NO. 1 (LEFT KICK PANEL)
1M		
3D	22	INSTRUMENT PANEL WIRE AND J/B NO. 3 (INSTRUMENT PANEL LEFT)

: CONNECTOR JOINING WIRE HARNESS AND WIRE HARNESS

CODE	SEE PAGE	JOINING WIRE HARNESS AND WIRE HARNESS (CONNECTOR LOCATION)
F1	34	INSTRUMENT PANEL WIRE AND COWL SUB WIRE (LEFT KICK PANEL)
F2	34	INSTRUMENT PANEL WIRE AND COWL SUB WIRE (LEFT KICK PANEL)
I1	34	COWL WIRE AND INSTRUMENT PANEL WIRE (INSTRUMENT PANEL CENTER)

: GROUND POINTS

CODE	SEE PAGE	GROUND POINTS LOCATION
D	34	J/B NO. 1 SET BOLT

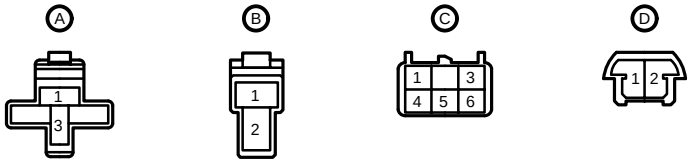

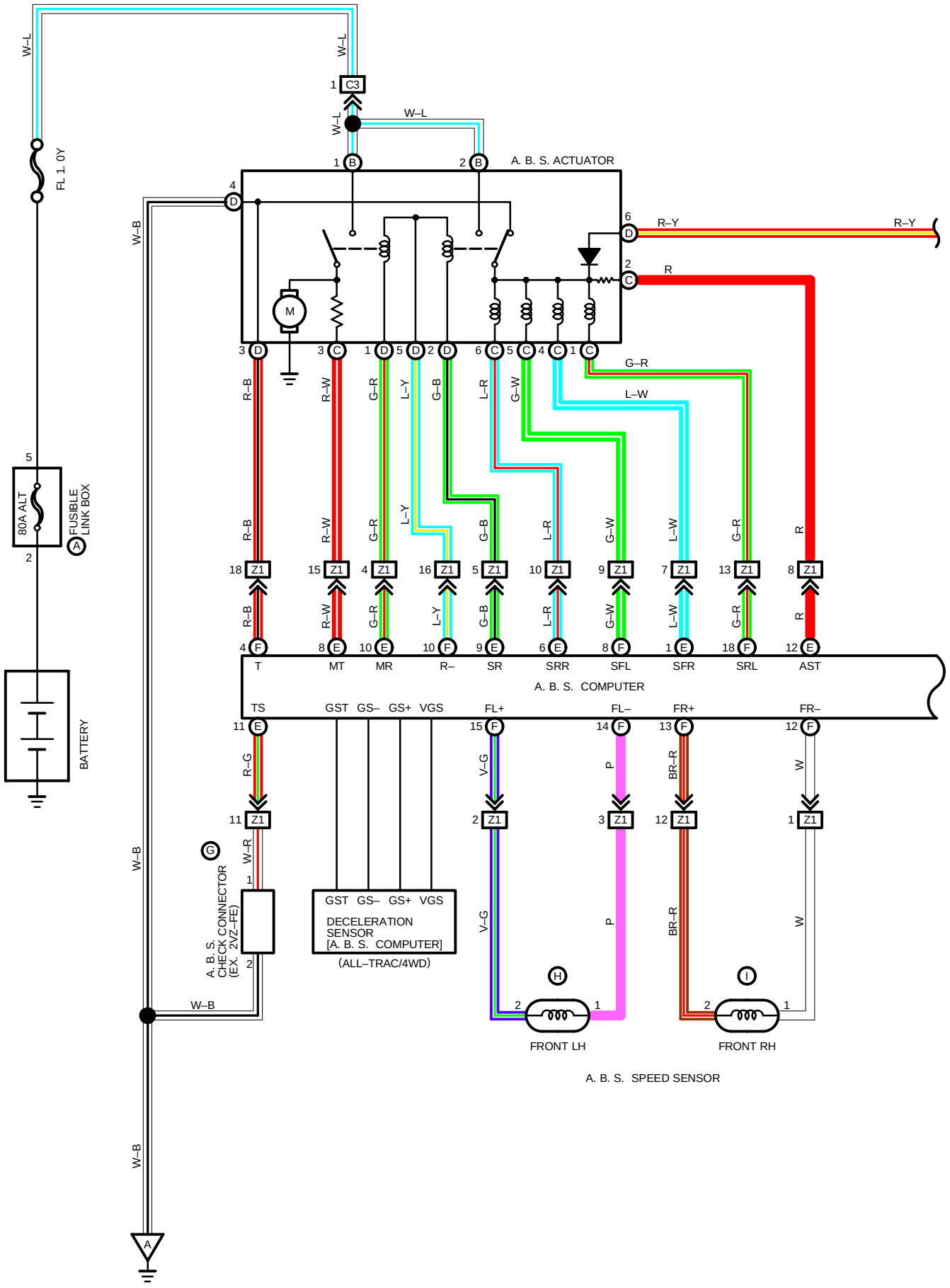
W–L
W–L
1 C3
W–L
W–L
1 B
2 B
A. B. S. ACTUATOR
FL 1. 0Y
4 D
W–B
6 D
R–Y
R–Y
2 C
R
M
3 D
3 C
1 D
5 D
2 D
6 C
5 C
4 C
1 C
R–B
R–W
G–R
L–Y
G–B
L–R
G–W
G–R
L–W
L–W
5
80A ALT
FUSIBLE LINK BOX
A
2
18 Z1
15 Z1
4 Z1
16 Z1
5 Z1
10 Z1
9 Z1
7 Z1
13 Z1
8 Z1
4 F
8 E
10 E
10 F
9 E
6 E
8 F
1 E
18 F
12 E
T
MT
MR
R–
SR
SRR
SFL
SFR
SRL
AST
A. B. S. COMPUTER
TS
GST
GS–
GS+
VGS
FL+
FL–
FR+
FR–
11 E
15 F
14 F
13 F
12 F
R–G
V–G
P
BR–R
W
11 Z1
2 Z1
3 Z1
12 Z1
1 Z1
G
W–R
1
2
A. B. S. CHECK CONNECTOR (EX. 2VZ–FE)
GST GS– GS+ VGS
DECELERATION SENSOR [A. B. S. COMPUTER]
(ALL–TRAC/4WD)
W–B
W–B
W–B
BATTERY
A
H
I
2
1
2
1
FRONT LH
FRONT RH
A. B. S. SPEED SENSOR

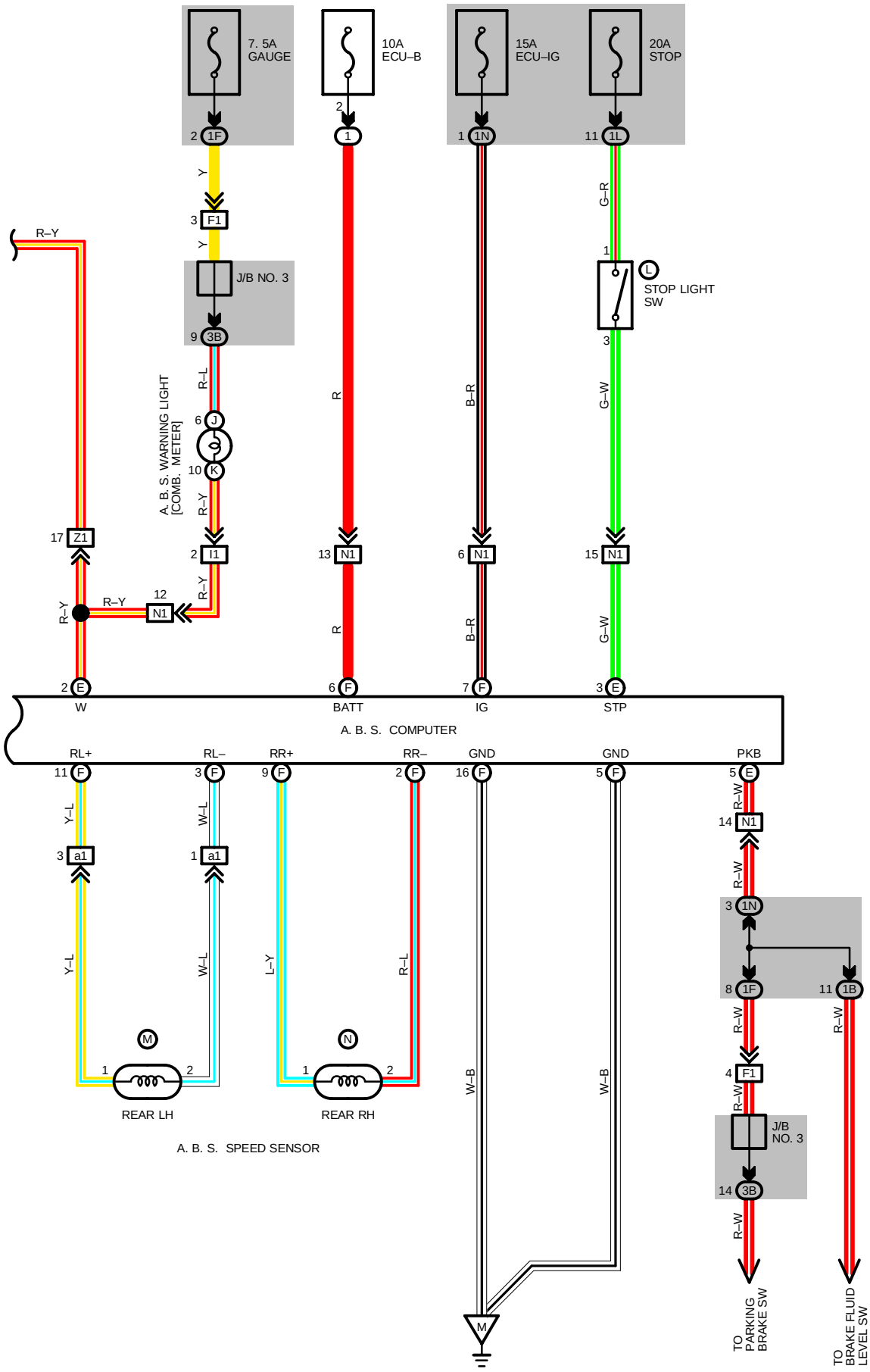
7. 5A
GAUGE
10A
ECU–B
15A
ECU–IG
20A
STOP
2 1F
2
1 1N
11 1L
Y
3 F1
Y
J/B NO. 3
9 3B
R–L
6 J
10 K
A. B. S. WARNING LIGHT
[COMB. METER]
R–Y
2 I1
R–Y
R
G–R
1
L
STOP LIGHT
SW
3
B–R
G–W
R–Y
17 Z1
R–Y
12
N1
13 N1
6 N1
15 N1
R
B–R
G–W
2 E
W
6 F
BATT
7 F
IG
3 E
STP
A. B. S. COMPUTER
RL+
RL–
RR+
RR–
GND
GND
PKB
11 F
3 F
9 F
2 F
16 F
5 F
5 E
Y–L
W–L
R–W
14 N1
3 a1
1 a1
R–W
3 1N
Y–L
W–L
L–Y
R–L
W–B
W–B
8 1F
11 1B
R–W
R–W
M
N
4 F1
1
2
1
2
R–W
J/B
NO. 3
14 3B
REAR LH
REAR RH
M
R–W
TO
PARKING
BRAKE SW
TO
BRAKE FLUID
LEVEL SW
A. B. S. SPEED SENSOR

A.B.S. (ANTI–LOCK BRAKE SYSTEM)

SYSTEM OUTLINE

THIS SYSTEM CONTROLS THE RESPECTIVE BRAKE FLUID PRESSURES ACTING ON THE DISC BRAKE CYLINDERS OF THE RIGHT FRONT WHEEL, LEFT FRONT WHEEL AND REAR WHEELS WHEN THE BRAKES ARE APPLIED IN A PANIC STOP SO THAT THE WHEELS DO NOT LOCK. THIS RESULTS IN IMPROVED DIRECTIONAL STABILITY AND STEERABILITY DURING PANIC BRAKING.

1. INPUT SIGNALS

(1) SPEED SENSOR SIGNAL
THE SPEED OF THE WHEELS IS DETECTED AND INPUT TO TERMINALS FL+, FR+, RL+ AND RR+ OF THE A.B.S. COMPUTER.

(2) DECELERATION SENSOR SIGNAL (FOR ALL–TRAC/4WD)
THE DEGREE OF VEHICLE DECELERATION IS DETECTED AND INPUT TO THE A.B.S. COMPUTER.

(3) STOP LIGHT SW SIGNAL
A SIGNAL IS INPUT TO TERMINAL STP OF THE A.B.S. COMPUTER WHEN BRAKE PEDAL IS OPERATED.

(4) PARKING BRAKE SW SIGNAL
A SIGNAL IS INPUT TO TERMINAL PKB OF THE A.B.S. COMPUTER WHEN THE PARKING BRAKE IS OPERATED.

2. SYSTEM OPERATION

DURING SUDDEN BRAKING THE A.B.S. COMPUTER, WHICH HAS SIGNALS INPUT FROM EACH SENSOR, CONTROLS THE CURRENT FLOWING TO THE SOLENOID INSIDE THE ACTUATOR AND LETS THE HYDRAULIC PRESSURE ACTING ON EACH WHEEL CYLINDER ESCAPE TO THE RESERVOIR. THE PUMP INSIDE THE ACTUATOR IS ALSO OPERATING AT THIS TIME AND IT RETURNS THE BRAKE FLUID FROM THE RESERVOIR TO THE MASTER CYLINDER, THUS PREVENTING LOCKING OF THE VEHICLE WHEELS.

IF THE COMPUTER JUDGES THAT THE HYDRAULIC PRESSURE ACTING ON THE WHEEL CYLINDER IS INSUFFICIENT, THE CURRENT ACTING ON THE SOLENOID IS CONTROLLED AND THE HYDRAULIC PRESSURE IS INCREASED. HOLDING OF THE HYDRAULIC PRESSURE IS ALSO CONTROLLED BY THE COMPUTER, BY THE SAME METHOD AS ABOVE. BY REPEATED PRESSURE REDUCTION, HOLDING AND INCREASE ARE REPLATED TO MAINTAIN VEHICLE STABILITY AND TO IMPROVE STEERBILITY DURING SUDDEN BRAKING.

SERVICE HINTS

A.B.S. COMPUTER

(CONNECT THE COMPUTER CONNECTOR)

(E) 1–GROUND, **(E)** 2–GROUND : APPROX. **12** VOLTS WITH IGNITION SW ON
APPROX **0** VOLT WITH IGNITION SW ON AND A.B.S. WARNING LIGHTS GOES ON

(E) 6–GROUND, **(E)**12–GROUND : APPROX. **12** VOLTS WITH IGNITION SW ON
APPROX **0** VOLT WITH IGNITION SW ON AND A.B.S. WARNING LIGHTS GOES ON

(F) 8–GROUND, **(F)**18–GROUND : APPROX. **12** VOLTS WITH IGNITION SW ON
APPROX **0** VOLT WITH IGNITION SW ON AND A.B.S. WARNING LIGHTS GOES ON

(F) 4–GROUND : APPROX. **12** VOLTS WITH A.B.S. CHACK CONNECTOR DISCONNECTED
APPROX. **0** VOLT WITH A.B.S. CHACK CONNECTSR CONNECTED

(DISCONNECT THE COMPUTER CONNECTOR)

(E) 1–**(E)** 12 : APPROX. **6** Ω WITH IGNITION SW OFF

(E) 6–**(E)** 12 : APPROX. **6** Ω WITH IGNITION SW OFF

(F) 8–**(E)** 12 : APPROX. **6** Ω WITH IGNITION SW OFF

(F) 18–**(E)** 12 : APPROX. **6** Ω WITH IGNITION SW OFF

(E) 3–GROUND : APPROX. **12** VOLTS WITH IGNITION SW OFF AND BRAKE PEDAL DEPRESSED
CONTINUITY WITH IGNITION SW OFF AND BRAKE PEDAL RETURNED

(E) 5–GROUND : APPROX. **0** VOLT WITH IGNITION SW ON AND PARKING BRAKE LEVER PULLED
APPROX. **12** VOLTS WITH IGNITION SW ON AND PARKING BRAKE LEVER RETURNED

(F) 4–GROUND, **(F) 5**–GROUND : CONTINUITY WITH IGNITION SW OFF

(F) 8–GROUND : **(F) 16**–GROUND : CONTINUITY WITH IGNITION SW OFF

(E) 9–**(F)** 10 : APPROX. **65**–**100** Ω WITH IGNITION SW OFF

(E) 10–**(F)** 10 : APPROX. **50**–**80** Ω WITH IGNITION SW OFF

(F) 11–GROUND : ALWAYS NO CONTINUITY
CONTINUITY WITH TS CONECTOR SHORTED

(E) 12–GROUND : **(F)** 14–GROUND : ALWAYS NO CONTINUITY

(E) 12–GROUND : APPROX. **5** Ω WITH IGNITION SW OFF

(F) 2–GROUND, **(F)** 3–GROUND : NO CONTINUITY WITH IGNITION SW OFF

(F) 10–GROUND : NO CONTINUITY WITH IGNITION SW OFF

(F) 6–GROUND : ALWAYS **12** VOLTS

(F) 7–GROUND : APPROX. **12** VOLTS WITH IGNITION SW ON

(F) 9–**(F)** 2 : APPROX. **0.85**–**1.30** KΩ

(F) 11–**(F)** 3 : APPROX. **0.85**–**1.30** KΩ

(F) 13–**(F)** 12 : APPROX. **0.85**–**1.30** KΩ

(F) 15–**(F)** 14 : APPROX. **0.85**–**1.30** KΩ

: PARTS LOCATION

CODE		SEE PAGE	CODE		SEE PAGE	CODE		SEE PAGE
A	F6	24 (2VZ–FE), 25 (3S–FE)	**F**	A30	26 (2VZ–FE), 27 (3S–FE)	**K**	C11	28
B	A1	24 (2VZ–FE), 25 (3S–FE)	**G**	A4	24 (S/D), 25 (STATION W/G)	**L**	S9	28
C	A3	24 (2VZ–FE), 25 (3S–FE)	**H**	A5	24 (2VZ–FE), 25 (3S–FE)	**M**	A31	26 (S/D), 27 (STATION W/G)
D	A2	24 (2VZ–FE), 25 (3S–FE)	**I**	A6	24 (2VZ–FE), 25 (3S–FE)	**N**	A32	26 (S/D), 27 (STATION W/G)
E	A29	26 (S/D), 27 (STATION W/G)	**J**	C13	28			

: RELAY BLOCKS

CODE	SEE PAGE	RELAY BLOCKS (RELAY BLOCK LOCATION)
1	23	R/B NO. 1 (LEFT KICK PANEL)

: JUNCTION BLOCK AND WIRE HARNESS CONNECTOR

CODE	SEE PAGE	JUNCTION BLOCK AND WIRE HARNESS (CONNECTOR LOCATION)
1B	18	ENGINE ROOM MAIN WIRE AND J/B NO. 1 (LEFT KICK PANEL)
1F	18	COWL SUB WIRE AND J/B NO. 1 (LEFT KICK PANEL)
1L	18	COWL WIRE AND J/B NO. 1 (LEFT KICK PANEL)
1N		
3B	22	INSTRUMENT PANEL WIRE AND J/B NO. 3 (INSTRUMENT PANEL LEFT)

: CONNECTOR JOINING WIRE HARNESS AND WIRE HARNESS

CODE	SEE PAGE	JOINING WIRE HARNESS AND WIRE HARNESS (CONNECTOR LOCATION)
C3	28 (2VZ–FE)	ENGINE ROOM MAIN WIRE AND ENGINE WIRE (NEAR J/B NO. 2)
	30 (3S–FE)	
F1	32	INSTRUMENT PANEL WIRE AND COWL SUB WIRE (LEFT KICK PANEL)
I1	32	COWL WIRE AND INSTRUMENT PANEL WIRE (INSTRUMENT PANEL CENTER)
N1	32	FLOOR NO. 2 WIRE AND COWL WIRE (RIGHT KICK PANEL)
Z1	32	ENGINE ROOM MAIN WIRE AND FLOOR NO. 2 WIRE (RIGHT KICK PANEL)
a1	34 (S/D)	FLOOR NO. 2 WIRE AND NO. 1 WIRE (UNDER REAR SEAT PANEL)
	36 (STATION W/G)	

: GROUND POINTS

CODE	SEE PAGE	GROUND POINTS LOCATION
A	28 (2VZ–FE)	RIGHT FENDER
	30 (3S–FE)	
M	34 (S/D)	RIGHT REAR FENDER
	36 (STATION W/G)	

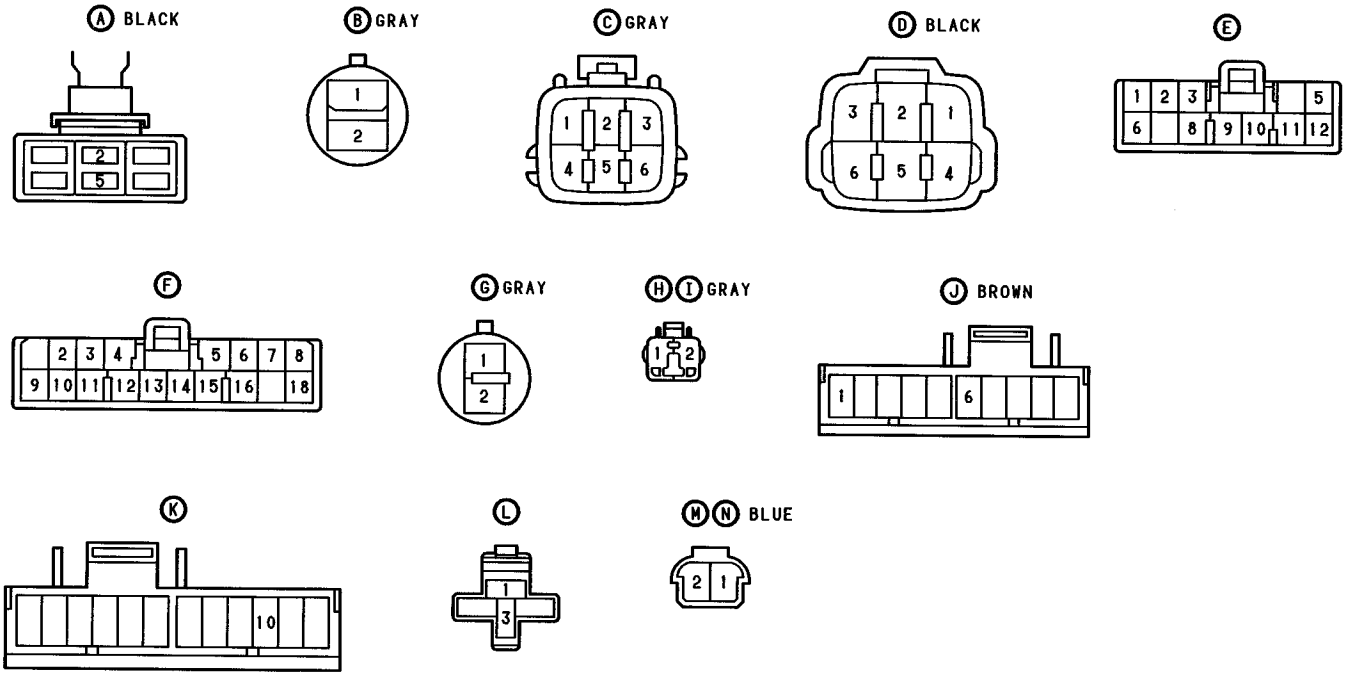

REAR WINDOW DEFOGGER

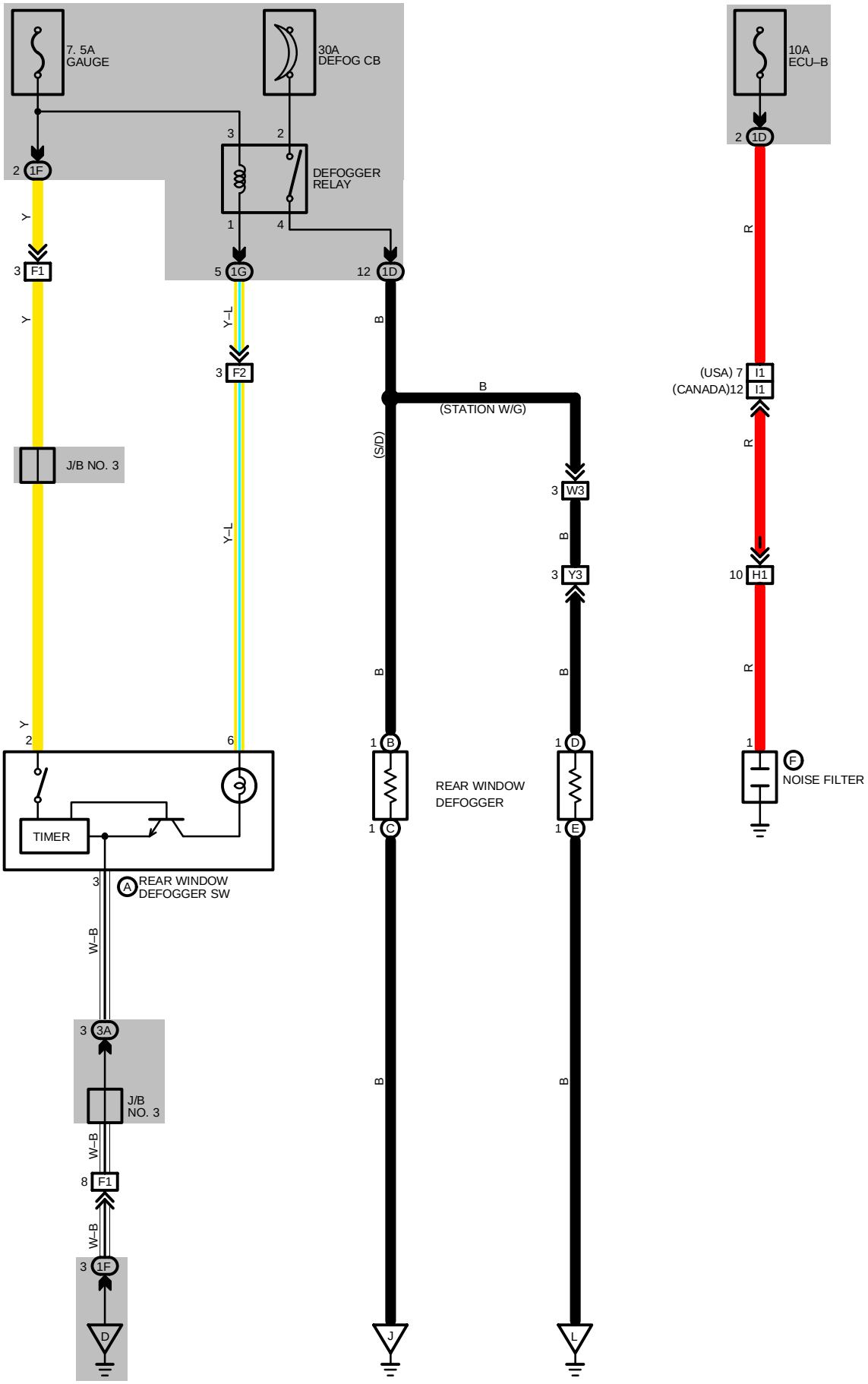

SERVICE HINTS

DEFOGGER RELAY

2–4 : CLOSED WITH IGNITION SW ON. DEFOGGER SW ON AND **15** MINUES THEREAFTER

DEFOGGER SW (W/ TIMER)

2–GROUND : APPROX. **12** VOLTS WITH IGNITION SW ON

3–GROUND : ALWAYS CONTINUITY

6–3 : CONTINUITY WITH DEFOGGER SW ON AND **15** MINUTES THEREAFTER

: PARTS LOCATION

CODE		SEE PAGE	CODE		SEE PAGE	CODE		SEE PAGE
A	R6	28	**C**	R19	26	**E**	R19	27
B	R18	26	**D**	R18	27	**F**	N3	26 (S/D), 27 (STATION W/G)

: RELAY BLOCKS

CODE	SEE PAGE	RELAY BLOCKS (RELAY BLOCK LOCATION)
1	23	R/B NO. 1 (LEFT KICK PANEL)

: JUNCTION BLOCK AND WIRE HARNESS CONNECTOR

CODE	SEE PAGE	JUNCTION BLOCK AND WIRE HARNESS (CONNECTOR LOCATION)
1D	18	FLOOR WIRE AND J/B NO. 1 (LEFT KICK PANEL)
1F	18	COWL SUB WIRE AND J/B NO. 1 (LEFT KICK PANEL)
1G		
3A	22	INSTRUMENT PANEL WIRE AND J/B NO. 3 (INSTRUMENT PANEL LEFT)

: CONNECTOR JOINING WIRE HARNESS AND WIRE HARNESS

CODE	SEE PAGE	JOINING WIRE HARNESS AND WIRE HARNESS (CONNECTOR LOCATION)
F1	34	INSTRUMENT PANEL WIRE AND COWL WIRE (LEFT KICK PANEL)
F2		
H1	34	FLOOR NO. 1 WIRE AND INSTRUMENT PANEL WIRE (LEFT KICK PANEL)
I1	34	COWL WIRE AND INSTRUMENT PANEL WIRE (INSTRUMENT PANEL CENTER)
W3	38	BACK DOOR NO. 1 WIRE AND FLOOR NO. 1 WIRE (BACK PANEL LEFT)
Y3	38	BACK DOOR NO. 1 AND BACK DOOR NO. 2 WIRE (BACK DOOR LEFT)

: GROUND POINTS

CODE	SEE PAGE	GROUND POINTS LOCATION
D	34	J/B NO. 1 SET BOLT
J	36	RIGHT REAR PILLAR
L	38	BACK DOOR LIGHT

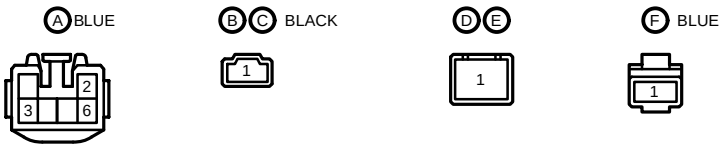

MOON ROOF

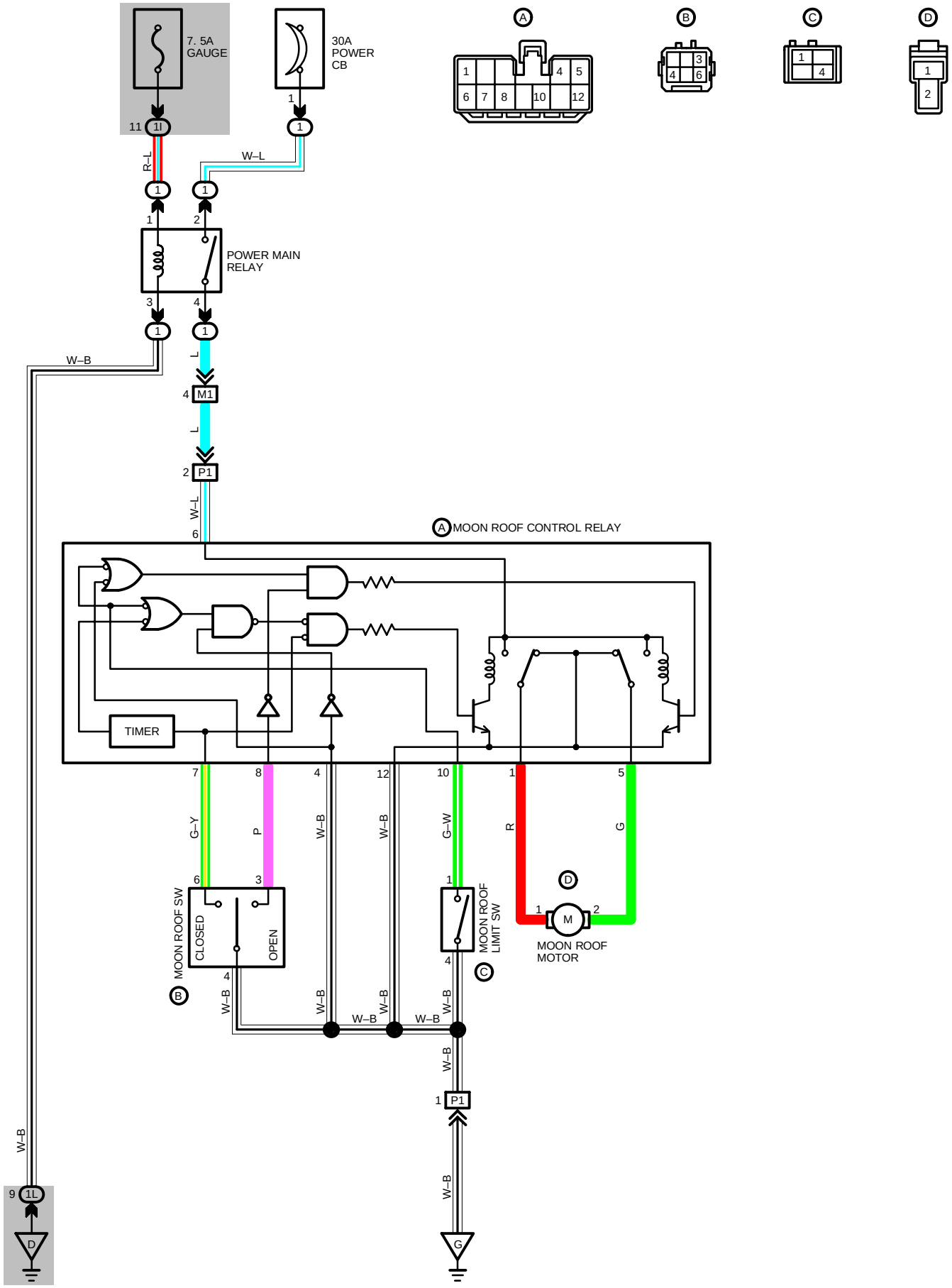
7. 5A
GAUGE
30A
POWER
CB
POWER MAIN
RELAY
W–B
W–L
R–L
L
M1
P1
A MOON ROOF CONTROL RELAY
TIMER
MOON ROOF SW
CLOSED
OPEN
MOON ROOF
LIMIT SW
MOON ROOF
MOTOR
G–Y
P
G–W
R
G
W–B
1L
M

SYSTEM OUTLINE

WITH THE IGNITION SW TURNED ON, CURRENT FLOWS THROUGH THE POWER CB TO TERMINAL 6 OF THE MOON ROOF CONTROL RELAY.

1. SLIDE OPEN OPERATION

WITH THE IGNITION SW TURNED ON AND THE MOON ROOF SW PUSHED TO OPEN POSITION, THE CURRENT FLOWING TO TERMINAL 6 OF MOON ROOF CONTROL RELAY FLOWS THROUGH TERMINAL 12 TO GROUND.

AS A RESULT, THE RELAY COIL OPERATES AND THE CURRENT FLOWS FROM TERMINAL 6 OF RELAY → TERMINAL 5 → TERMINAL 2 OF MOON ROOF MOTOR → MOTOR → TERMINAL 1 → TERMINAL 1 OF RELAY → TERMINAL 12 → TO GROUND AND ROTATES THE MOTOR TO OPEN THE MOON ROOF AS LONG AS THE MOON ROOF SW IS PUSHED.

WHEN THE MOON ROOF IS OPENED COMPLETELY, EVEN IF THE MOON ROOF SW IS PUSHED CONTINUOUSLY, THE CURRENT TO THE MOON ROOF MOTOR INCREASES.

IN THIS CASE, THE CIRCUIT BREAKER BUILT INTO THE MOTOR OPENS AND CUTS OUT THE CURRENT TO THE MOTOR, PREVENTING THE MOTOR FROM BURNING OUT.

2. SLIDE CLOSE OPERATION

WITH THE IGNITION SW TURNED ON AND THE MOON ROOF SW PUSHED TO CLOSE POSITION, A SIGNAL IS INPUT TO TERMINAL 7 OF MOON ROOF CONTROL RELAY FROM TERMINAL 6 OF THE MOON ROOF SW. THUS, THE RELAY COIL OPERATES AND THE CURRENT FLOWING TO TERMINAL 6 OF RELAY FLOWS TO TERMINAL 1 → TERMINAL 1 OF MOON ROOF MOTOR → MOTOR → TERMINAL 2 → TERMINAL 5 OF RELAY → TERMINAL 12 → TO GROUND AND ROTATES THE MOTOR TO CLOSE THE MOON ROOF. SLIDE CLOSE OPERATION CONTINUES WHILE THE MOON ROOF SW CONTINUES TO BE PUSHED.

100 MM (3.94 IN.) BEFORE THE FULLY CLOSED POSITION THE MOON ROOF LIMIT SW TURNS OFF AND THIS SIGNAL IS INPUT INTO THE RELAY, SO THE RELAY STOPS OPERATION. THUS CURRENT DOES NOT FLOW TO THE MOON ROOF MOTOR AND THE MOON ROOF AUTOMATICALLY STOPS.

IF THE MOON ROOF SW IS THEN PUSH AGAIN, THE TIMER INSTALLED IN THE MOON ROOF CONTROL TURNS ON AND THE RELAY OPERATES FOR 0.65 SEC. TO RE–OPERATE THE MOTOR SO THAT THE MOON ROOF LIMIT SW TURNS ON. AS A RESULT, AS LONG AS THE MOON ROOF SW IS PUSHED, SLIDE CLOSE OPERATION OCCURS AND THE MOON ROOF IS ABLE TO FULLY CLOSE.

SERVICE HINTS

(A) MOON ROOF CONTROL RELAY

12,4–GROUND : ALWAYS CONTINUITY
6–GROUND : APPROX. **12** VOLTS WITH IGNITION SW AT **ON** POSITION
1–GROUND : APPROX. **12** VOLTS WITH IGNITION SW ON MOON ROOF SW AT **CLOSE** POSITION
5–GROUND : APPROX. **12** VOLTS WITH IGNITION SW ON MOON ROOF SW AT **OPEN** POSITION
10–GROUND : **0** VOLT → APPROX. **12** VOLTS WITH APPROX. **100** MM (**3.94** IN) BEFORE **CLOSE** POSITION

(DISCONNECT WIRING CONNECTOR FROM COMPUTER)

8–GROUND : CONTINUITY WITH MOON ROOF SW AT **OPEN**
7–GROUND : CONTINUITY WITH MOON ROOF SW AT **CLOSED**

: PARTS LOCATION

CODE		SEE PAGE	CODE		SEE PAGE	CODE		SEE PAGE
A	M2	26 (S/D), 27 (STATION W/G)	**C**	M3	26 (S/D), 27 (STATION W/G)			
B	M5	26 (S/D), 27 (STATION W/G)	**D**	M4	26 (S/D), 27 (STATION W/G)			

: RELAY BLOCKS

CODE	SEE PAGE	RELAY BLOCKS (RELAY BLOCK LOCATION)
1	23	R/B NO. 1 (LEFT KICK PANEL)

: JUNCTION BLOCK AND WIRE HARNESS CONNECTOR

CODE	SEE PAGE	JUNCTION BLOCK AND WIRE HARNESS (CONNECTOR LOCATION)
1I	18	COWL WIRE AND J/B NO. 1 (LEFT KICK PANEL)
1L		

: CONNECTOR JOINING WIRE HARNESS AND WIRE HARNESS

CODE	SEE PAGE	JOINING WIRE HARNESS AND WIRE HARNESS (CONNECTOR LOCATION)
M1	34	COWL WIRE AND ROOF WIRE (INSTRUMENT PANEL RIGHT)
P1	36 (S/D)	ROOF NO. 2 WIRE AND ROOF WIRE (W/ MOON ROOF, ROOF RIGHT)
	38 (STATION W/G)	

: GROUND POINTS

CODE	SEE PAGE	GROUND POINTS LOCATION
D	34	J/B NO. 1 SET BOLT
G	36 (S/D)	ROOF RIGHT (W/ MOON ROOM)
	38 (STATION W/G)	

AUTO ANTENNA

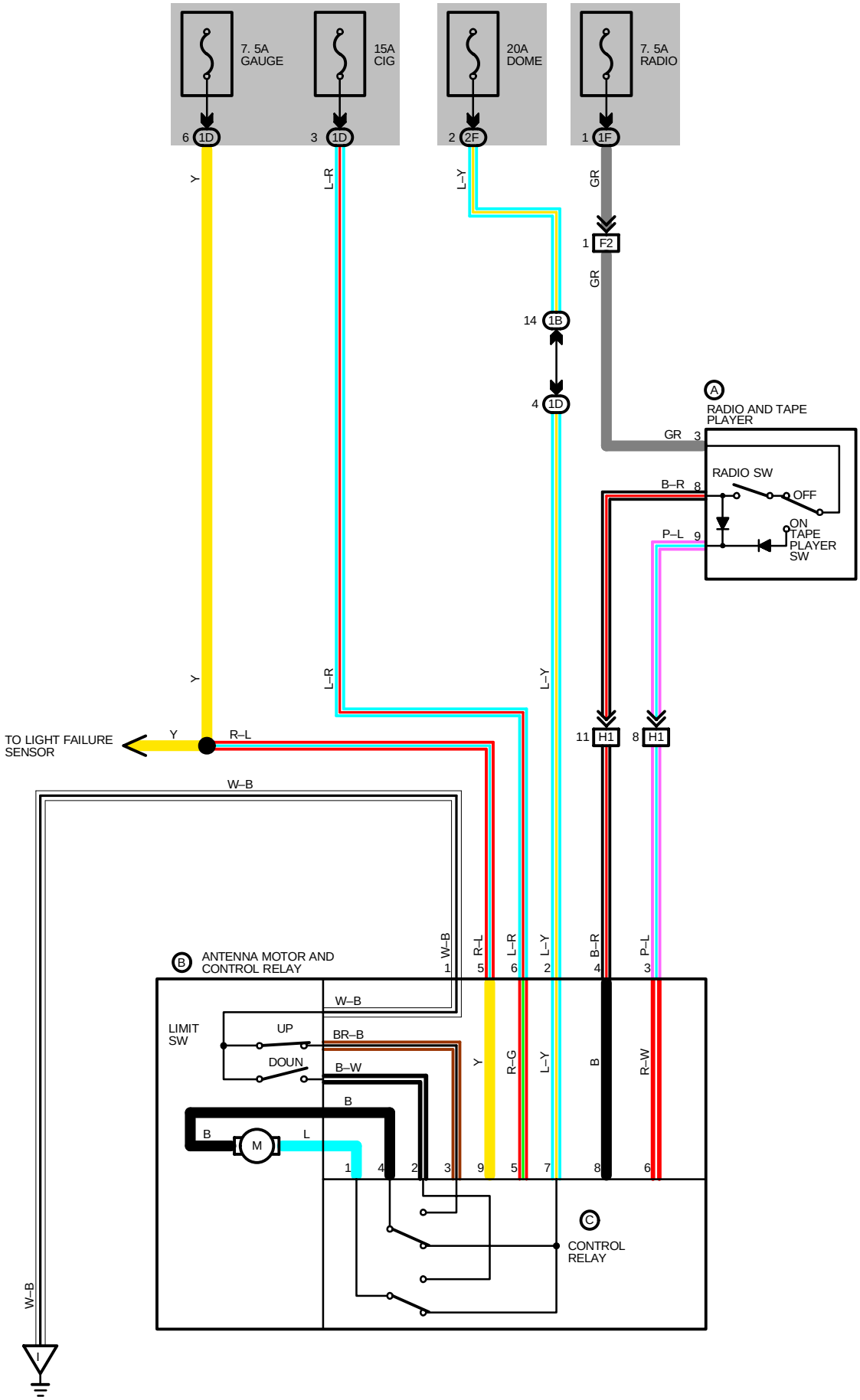

SERVICE HINTS

(C) CONTROL RELAY

3–GROUND : CONTINUITY (UPPER LIMIT SW ON) UNLESS ANTENNA AT **UP** STOP

2–GROUND : CONTINUITY (DOWN LIMIT SW ON) UNLESS ANTENNA AT **DOWN** STOP

4–3 : CLOSED WITH IGNITION SW AT **ACC** OR **ON** POSITION AND RADIO SW ON AND PLAYER SW OFF UNTIL ANTENNA AT **UPPERMOST** POSITION

1–2 : CLOSED WITH IGNITION SW AT **ACC** OR **ON** POSITION AND RADIO SW OFF AND PLAYER SW OFF UNTIL ANTENNA AT **LOWERMOST** POSITION

1–2 : CLOSED WITH IGNITION SW OFF UNTIL ANTENNA AT **LOWERMOST** POSITION

: PARTS LOCATION

CODE		SEE PAGE	CODE		SEE PAGE	CODE		SEE PAGE
A	R5	28	**B**	A33	26 (S/D), 27 (STATION W/G)			

: JUNCTION BLOCK AND WIRE HARNESS CONNECTOR

CODE	SEE PAGE	JUNCTION BLOCK AND WIRE HARNESS (CONNECTOR LOCATION)
1B	18	ENGINE ROOM MAIN WIRE AND J/B NO. 1 (LEFT KICK PANEL)
1D	18	FLOOR WIRE AND J/B NO. 1 (LEFT KICK PANEL)
1F	18	COWL SUB WIRE AND J/B NO. 1 (LEFT KICK PANEL)
2F	20	ENGINE ROOM MAIN WIRE AND J/B NO. 2 (ENGINE COMPARTMENT LEFT)

: CONNECTOR JOINING WIRE HARNESS AND WIRE HARNESS

CODE	SEE PAGE	JOINING WIRE HARNESS AND WIRE HARNESS (CONNECTOR LOCATION)
F2	34	INSTRUMENT PANEL WIRE AND COWL SUB WIRE (LEFT KICK PANEL)
H1	34	FLOOR NO. 1 WIRE AND INSTRUMENT PANEL WIRE (LEFT KICK PANEL)

: GROUND POINTS

CODE	SEE PAGE	GROUND POINTS LOCATION
I	36 (S/D) 38 (STATION W/G)	LEFT REAR FENDER

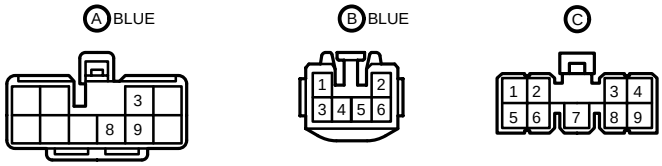

RADIO AND TAPE PLAYER

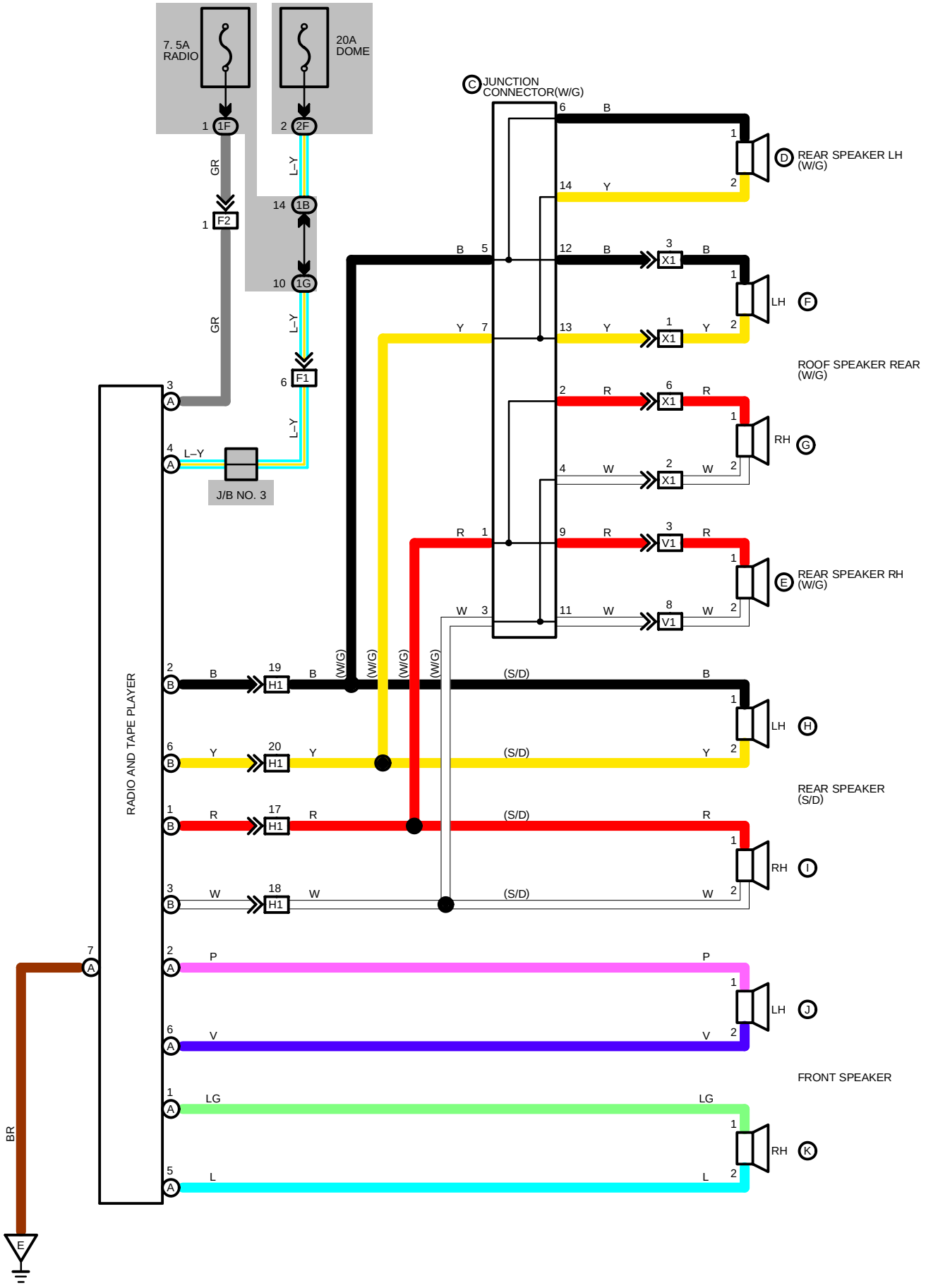

SERVICE HINTS

(A) RADIO AND TAPE RLAYER

4–GROUND : ALWAYS APPROX. **12** VOLTS
3–GROUND : APPROX. **12** VOLTS WITH IGNITION SW AT **ON** OR **ACC** POSITION
7–GROUND : ALWAYS CONTINUITY

○ : PARTS LOCATION

CODE		SEE PAGE	CODE		SEE PAGE	CODE		SEE PAGE
A	R5	28	**E**	S11	27	**I**	S11	26
B	R4	28	**F**	R23	27	**J**	S7	28
C	J1	27	**G**	R24	27	**K**	S8	28
D	S10	27	**H**	S10	26			

⬭ : JUNCTION BLOCK AND WIRE HARNESS CONNECTOR

CODE	SEE PAGE	JUNCTION BLOCK AND WIRE HARNESS (CONNECTOR LOCATION)
1B	18	ENGINE ROOM MAIN WIRE AND J/B NO. 1 (LEFT KICK PANEL)
1F	18	COWL SUB WIRE AND J/B NO. 1 (LEFT KICK PANEL)
1G		
2F	20	ENGINE ROOM MAIN WIRE AND J/B NO. 2 (ENGINE COMPARTMENT LEFT)

▭ : CONNECTOR JOINING WIRE HARNESS AND WIRE HARNESS

CODE	SEE PAGE	JOINING WIRE HARNESS AND WIRE HARNESS (CONNECTOR LOCATION)
F1	34	INSTRUMENT PANEL WIRE AND COWL SUB WIRE (LEFT KICK PANEL)
F2		
H1	34	FLOOR NO. 1 WIRE AND INSTRUMENT PANEL WIRE (LEFT KICK PANEL)
V1	38	LUGGAGE ROOM NO. 1 WIRE AND FLOOR NO. 1 WIRE (BACK PANEL LEFT)
X1	38	LUGGAGE ROOM NO. 3 WIRE AND FLOOR NO. 1 WIRE (BACK PANEL LEFT)

▽ : GROUND POINTS

CODE	SEE PAGE	GROUND POINTS LOCATION
E	34	LEFT KICK PANEL

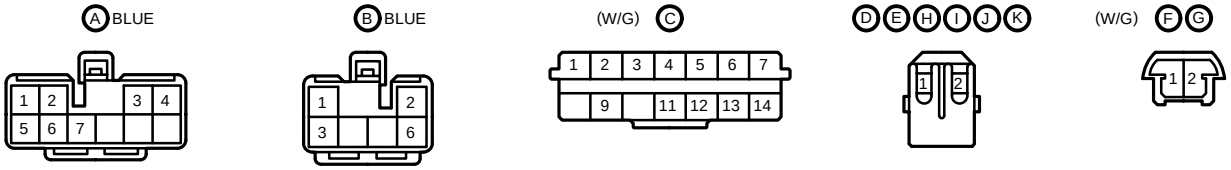

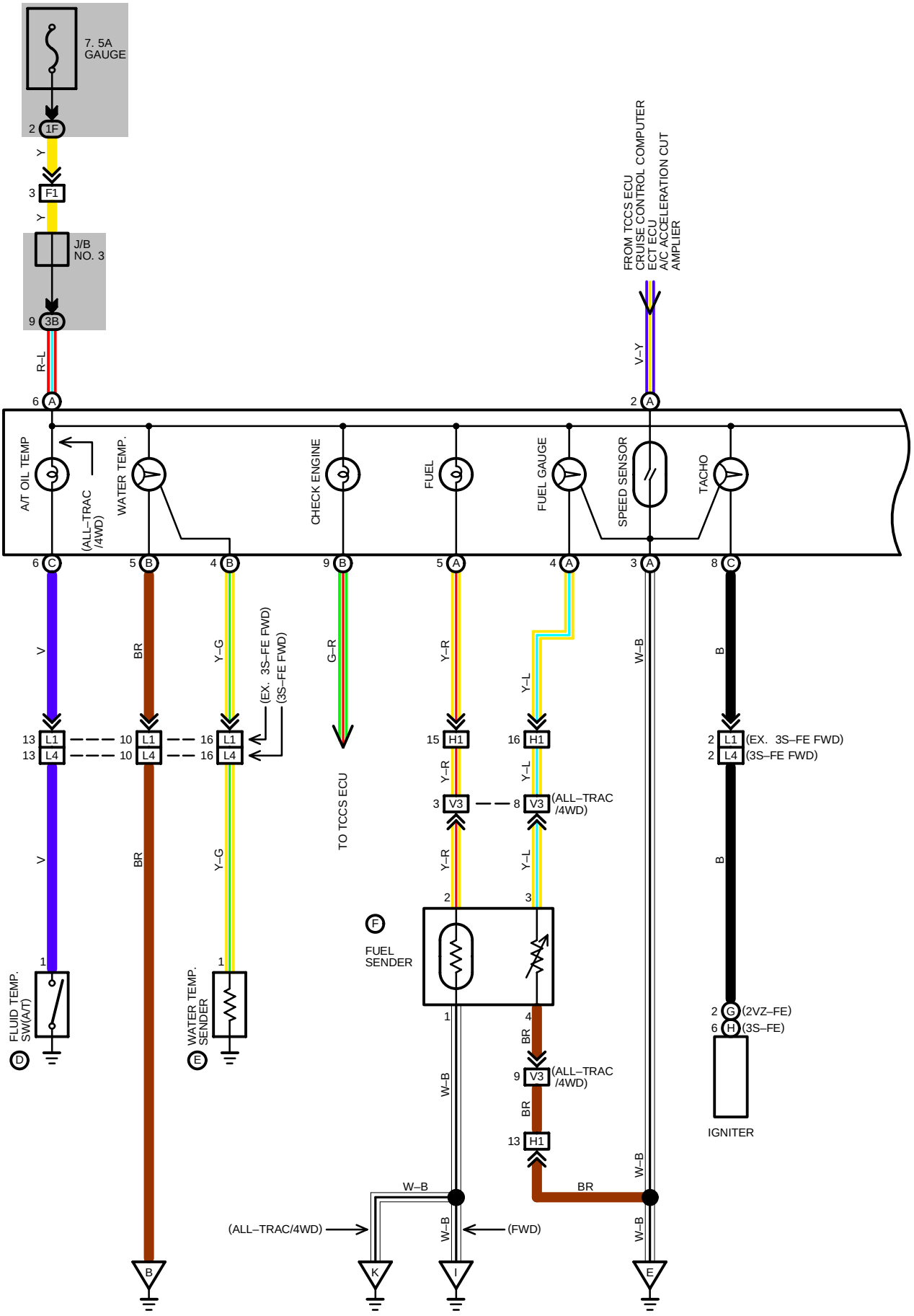
7. 5A
GAUGE
2 1F
Y
3 F1
Y
J/B
NO. 3
9 3B
R–L
6 A
FROM TCCS ECU
CRUISE CONTROL COMPUTER
ECT ECU
A/C ACCELERATION CUT
AMPLIER
V–Y
2 A
A/T OIL TEMP
(ALL–TRAC
/4WD)
WATER TEMP.
CHECK ENGINE
FUEL
FUEL GAUGE
SPEED SENSOR
TACHO
6 C
5 B
4 B
9 B
5 A
4 A
3 A
8 C
V
BR
Y–G
(EX. 3S–FE FWD)
(3S–FE FWD)
G–R
Y–R
Y–L
W–B
B
13 L1
13 L4
10 L1
10 L4
16 L1
16 L4
15 H1
16 H1
2 L1
2 L4
(EX. 3S–FE FWD)
(3S–FE FWD)
TO TCCS ECU
3 V3
8 V3
(ALL–TRAC
/4WD)
2
3
F
FUEL
SENDER
1
4
2 G
(2VZ–FE)
6 H
(3S–FE)
IGNITER
FLUID TEMP.
SW(A/T)
D
WATER TEMP.
SENDER
E
W–B
BR
9 V3
(ALL–TRAC
/4WD)
13 H1
(ALL–TRAC/4WD)
(FWD)
B
K
I
E

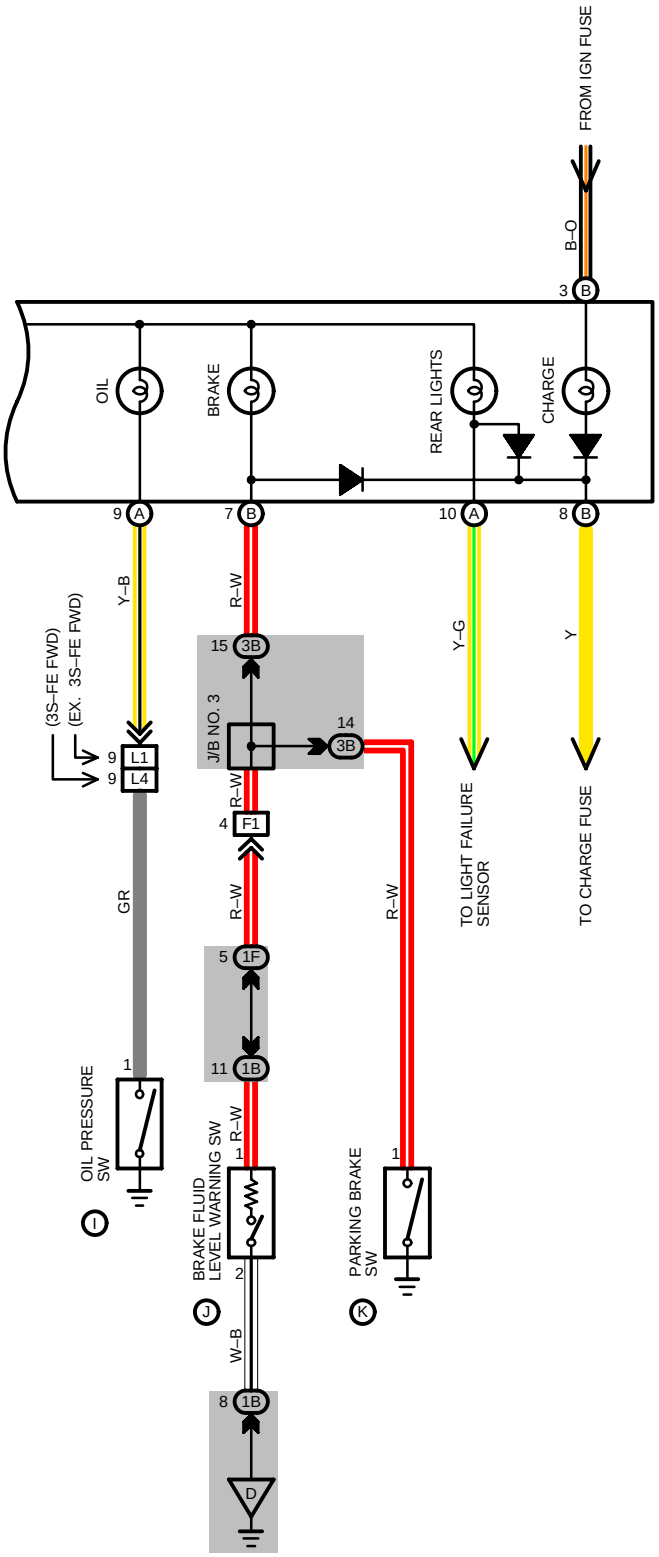
FROM IGN FUSE
B–O
3 B
OIL
BRAKE
REAR LIGHTS
CHARGE
9 A
7 B
10 A
8 B
Y–B
R–W
Y–G
Y
(3S–FE FWD)
(EX. 3S–FE FWD)
15 3B
J/B NO. 3
14 3B
9 L1
9 L4
R–W
4 F1
GR
R–W
R–W
5 1F
11 1B
TO LIGHT FAILURE SENSOR
TO CHARGE FUSE
1
OIL PRESSURE SW
I
BRAKE FLUID LEVEL WARNING SW
1
R–W
2
J
W–B
8 1B
D
1
PARKING BRAKE SW
K

COMBINATION METER

SERVICE HINTS

COMBINATION METER

(A) 6–GROUND : **12** VOLTS WITH IGNITION SW **ON**
(B) 3–GROUND : **12** VOLTS WITH IGNITION SW **ON**
(B) 5, **(A)** 3–GROUND : ALWAYS CONTINUITY

(A) FUEL GAUGE

6–4 : APPROX. **64.3**
6–3 : APPROX. **233.3**
4–3 : APPROX. **169.0**

WATER TEMP. GAUGE

(A) 6–**(B)** 4 : APPROX. **56**
(A) 6–**(B)** 5 : APPROX. **145**
(B) 4–**(B)** 5 : APPROX. **201**

(E) WATER TEMP. SENDER

(NIPPON DENSO MAKE)
1–GROUND : APPROX. **226** AT **50**˚C (**122**˚F)
APPROX. **26.4** AT **115**˚C (**239**˚F)
(YAZAKI MAKE)
1–GROUND : APPROX. **152.7** AT **60**˚C (**140**˚F)
APPROX. **26.4** AT **115**˚C (**239**˚F)

(F) FUEL SENDER

3–4 : APPROX. **3** WITH FUEL FULL
APPROX. **110.0** WITH FUEL EMPTY

(I) OIL PRESSURE SW

1–GROUND : CLOSED WITH OIL PRESSURE BELOW **0.2** KG/CM^2 (**2.84** PSI, **19.61** KPA)

(J) BRAKE FLUID LEVEL WARNING SW

1–2 : CLOSED WITH FLOAT DOWN

(K) PARKING BRAKE SW

1–GROUND : CLOSED WITH PARKING BRAKE LEVER PULLED UP

○ : PARTS LOCATION

CODE		SEE PAGE	CODE		SEE PAGE	CODE		SEE PAGE
A	C13	28	**E**	W1	24 (2VZ–FE), 25 (3S–FE)	**H**	I2	25
B	C11	28	**F**	F9	26 (S/D), 27 (STATION W/G)	**I**	O5	24 (2VZ–FE), 25 (3S–FE)
C	C12	28	**F**	F10	26 (S/D)	**J**	B2	24 (2VZ–FE), 25 (3S–FE)
D	A44	25	**G**	I3	24	**K**	P1	28

⬭ : JUNCTION BLOCK AND WIRE HARNESS CONNECTOR

CODE	SEE PAGE	JUNCTION BLOCK AND WIRE HARNESS (CONNECTOR LOCATION)
1B	18	ENGINE ROOM MAIN WIRE AND J/B NO. 1 (LEFT KICK PANEL)
1F	18	COWL SUB WIRE AND J/B NO. 1 (LEFT KICK PANEL)
3B	22	INSTRUMENT PANEL WIRE AND J/B NO. 3 (INSTRUMENT PANEL LEFT)

▭ : CONNECTOR JOINING WIRE HARNESS AND WIRE HARNESS

CODE	SEE PAGE	JOINING WIRE HARNESS AND WIRE HARNESS (CONNECTOR LOCATION)
F1	34	INSTRUMENT PANEL WIRE AND COWL SUB WIRE (LEFT KICK PANEL)
H1	34	FLOOR NO. 1 WIRE AND INSTRUMENT PANEL WIRE (LEFT KICK PANEL)
L1	34	ENGINE WIRE AND INSTRUMENT PANEL WIRE (BEHIND GLOVE BOX)
L4		
V3	36	FLOOR NO. 1 WIRE AND LUGGAGE ROOM NO. 1 (BACK PANEL LEFT)

▽ : GROUND POINTS

CODE	SEE PAGE	GROUND POINTS LOCATION
B	30 (2VZ–FE)	INTAKE MANIFOLD
	32 (3S–FE)	
D	34	J/B NO. 1 SET BOLT
E	34	LEFT KICK PANEL
I	36 (S/D)	LEFT REAR FENDER
	38 (STATION W/G)	
K	36	BACK PANEL CENTER

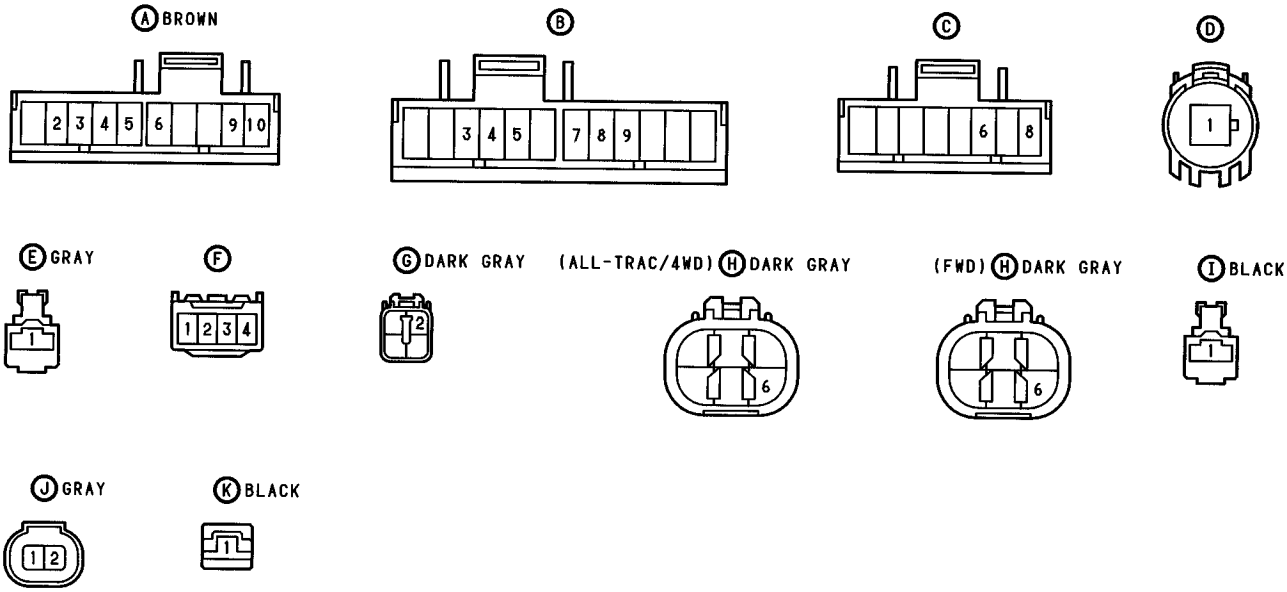
Ⓐ BROWN
2 3 4 5 6 9 10
Ⓑ
3 4 5 7 8 9
Ⓒ
6 8
Ⓓ
1
Ⓔ GRAY
1
Ⓕ
1 2 3 4
Ⓖ DARK GRAY
1 2
(ALL-TRAC/4WD) Ⓗ DARK GRAY
6
(FWD) Ⓗ DARK GRAY
6
Ⓘ BLACK
1
Ⓙ GRAY
1 2
Ⓚ BLACK

SYSTEM OUTLINE

1. RECIRC/FRESH CONTROL SERVO MOTOR OPERATION (FOR PUSH SWITCH TYPE)

(SWITCHING FROM FRESH TO RECIRC)

WITH THE IGNITION SW ON, CURRENT FROM THE GAUGE FUSE FLOWS TO TERMINAL 1 OF THE SERVO MOTOR. WHEN THE RECIRC SW IS TURNED ON, THE CURRENT FLOWS FROM SERVO MOTOR → TERMINAL 2 → TERMINAL I2 OF THE HEATER CONTROL ASSEMBLY → TERMINAL I17 → GROUND, THE MOTOR ROTATES AND THE DAMPER MOVES TO THE RECIRC SIDE. WHEN IT IS IN THE RECIRC POSITION, THE CIRCUIT IS CUT INSIDE THE SERVO MOTOR AND THE DAMPER STOPS IN THAT POSITION.

WITH THE CIRCUIT FOR THE INDICATOR LIGHT, CURRENT FLOWS FROM THE GAUGE FUSE → TERMINAL I7 OF THE HEATER CONTROL ASSEMBLY → INDICATOR LIGHT → TERMINAL I17 → GROUND AND THE INDICATOR LIGHT CONTINUES TO LIGHT UP WHILE THE RECIRC SW IS ON.

(SWITCHING FROM RECIRC TO FRESH)

WHEN THE IGNITION IS ON AND THE FRESH SW IS TURNED ON, CURRENT FLOWS FROM TERMINAL 3 OF THE SERVO MOTOR → TERMINAL I10 OF THE HEATER CONTROL ASSEMBLY → TERMINAL I17 → GROUND, THE MOTOR ROTATES AND THE DAMPER MOVES TO THE FRESH SIDE. WHEN THE DAMPER IS IN THE FRESH POSITION, THE CIRCUIT IS CUT INSIDE THE SERVO MOTOR AND THE DAMPER STOPS IN THAT POSITION.

2. OPERATION OF THE AIR VENT MODE CONTROL SERVO MOTOR (FOR PUSH SWITCH TYPE)

(SWITCHING FROM FACE TO BI–LEVEL)

WHEN THE BI–LEVEL SW IS TURNED ON WITH THE DAMPER IN THE FACE POSITION, A SIGNAL THAT THE CIRCUIT IS GROUNDED IS OUTPUT FROM TERMINAL I12 OF THE HEATER CONTROL ASSEMBLY → TERMINAL 6 OF THE SERVO MOTOR → TERMINAL D11 OF THE SYSTEM AMPLIFIER. (AT THIS TIME, THE CURRENT FLOWING THROUGH TERMINAL I7 OF THE HEATER CONTROL ASSEMBLY FLOWS THROUGH TERMINAL I17 → GROUND, CAUSING THE INDICATOR LIGHT TO LIGHT UP). AT THE SAME TIME, THE SIGNAL FOR WHEN THE CIRCUIT IS NOT GROUNDED IS INPUT TO TERMINAL D10 OF THE AMPLIFIER. THESE 2 SIGNALS CAUSE THE AMPLIFIER TO OPERATE AND CURRENT FLOWS FROM TERMINAL D5 OF THE AMPLIFIER → SERVO MOTOR → TERMINAL D4 → GROUND, WHICH ROTATES THE SERVO MOTOR, CAUSING THE DAMPER TO MOVE TO THE BI–LEVEL POSITION.

WHEN THE DAMPER COMES TO THE BI–LEVEL POSITION, A SIGNAL THAT THE GROUND CIRCUIT IS CUT IS INPUT TO TERMINAL D11 OF THE AMPLIFIER, AND AMPLIFIER OPERATION CAUSES THE SERVO MOTOR TO STOP ROTATING AND THE DAMPER TO STAY IN POSITION.

(SWITCHING TO OTHER MODE POSITIONS)

WHEN SWITCHING THE DAMPER FROM FACE TOWARDS DEF, AS EXPLAINED BEFORE, A GROUND SIGNAL IS INPUT TO TERMINAL D11 OF THE AMPLIFIER AND A NON–GROUND SIGNAL IS INPUT TO TERMINAL D10 SO THAT CURRENT FLOWS FROM TERMINAL D5 → SERVO MOTOR → TERMINAL D4, MOVING THE DAMPER TO THE DESIRED POSITION.

WHEN SWITCHING THE DAMPER IN THE OPPOSITE DIRECTION FROM DEF TOWARDS FACE, A GROUND SIGNAL IS INPUT TO TERMINAL D10 OF THE AMPLIFIER AND A NON–GROUND SIGNAL IS INPUT TO TERMINAL D11 SO THAT THE CURRENT FLOWS FROM TERMINAL D4 → SERVO MOTOR → TERMINAL D5, CAUSING THE SERVO MOTOR TO ROTATE IN REVERSE AND MOVING THE DAMPER TO THE DESIRED POSITION.

3. OPERATION OF THE AIR MIX CONTROL SERVO MOTOR (FOR PUSH SWITCH TYPE)

(SWITCHING FROM WARM TO COOL)

WHEN THE TEMPERATURE CONTROL KNOB IS SWITCHED FROM WARM POSITION TO COOL POSITION, THE RESISTANCE INSIDE THE HEATER CONTROL ASSEMBLY BECOMES GREATER THAN THE RESISTANCE INSIDE THE SERVO MOTOR. THE SIGNAL AT THIS TIME IS INPUT TO THE SYSTEM AMPLIFIER, CAUSING THE AMPLIFIER TO OPERATE. CURRENT FLOWS FROM TERMINAL D8 OF THE AMPLIFIER → SERVO MOTOR → TERMINAL D9 → GROUND, CHANGING THE DAMPER FROM WARM TO COOL POSITION. WHEN THE RESPECTIVE RESISTANCES ARE THE SAME VALVE, THE SERVO MOTOR STOP.

(SWITCHING FROM COOL TO WARM)

WHEN THE TEMPERATURE CONTROL KNOB IS SWITCHED FROM COOL POSITION TO WARM POSITION, THE RESISTANCE INSIDE THE HEATER CONTROL ASSEMBLY BECOMES LESS THAN THE RESISTANCE INSIDE THE SERVO MOTOR. THE SIGNAL AT THIS TIME IS INPUT TO THE SYSTEM AMPLIFIER, CAUSING THE AMPLIFIER TO OPERATE. CURRENT FLOWS FROM TERMINAL D9 OF THE AMPLIFIER → SERVO MOTOR → TERMINAL D8 → GROUND, CHANGING THE DAMPER FROM COOL TO WARM POSITION. WHEN THE RESPECTIVE RESISTANCE ARE THE SAME VALVE, THE SERVO MOTOR STOPS.

4. RADIATOR FAN AND CONDENSER FAN OPERATION

WHEN THE IGNITION SW IS TURNED ON, CURRENT FROM THE IGN FUSE FLOWS THROUGH TERMINAL 1 OF THE RADIATOR FAN RELAY NO. 1 → TERMINAL 2 → TERMINAL 1 OF THE A/C HIGH PRESSURE SW → TERMINAL 2 → TERMINAL 1 OF THE A/C WATER TEMP. SW → GROUND, ACTIVATING THE RELAY. AT THIS TIME, CURRENT IS SUPPLIED FROM THE FL 30A RDI FAN TO TERMINAL 4 OF THE RELAY. AT THE SAME TIME, CURRENT FROM THE IGN FUSE FLOWS THROUGH TERMINAL 6 OF THE CONDENSER FAN RELAY NO. 2 → COIL → TERMINAL 2 → A/C HIGH PRESSURE SW → A/C WATER TEMP. SW → GROUND, THEN THROUGH THE FL 30A CDS → TERMINAL 1 OF THE A/C CONDENSER FAN MOTOR → TERMINAL 2 → TERMINAL 1 OF THE RELAY NO. 2 → TERMINAL 4 → TERMINAL 2 OF THE RELAY NO. 3.

***** LOW SPEED OPERATION

WHEN THE A/C MAGNET CLUTCH IS TURNED ON DURING A/C OPERATION, CURRENT FROM THE A/C FUSE FLOWS THROUGH TERMINAL 1 OF THE A/C MAGNET CLUTCH RELAY → TERMINAL 2 → TERMINAL 1 OF THE CONDENSER FAN RELAY NO. 3 → TERMINAL 3 → GROUND, ACTIVATING RELAY NO. 3. THEN THE CURRENT APPLIED TO TERMINAL 2 OF RELAY NO. 3 FLOWS THROUGH TERMINAL 4 → TERMINAL 1 OF THE RADIATOR FAN MOTOR → TERMINAL 2 → GROUND. SINCE THE CONDENSER AND RADIATOR FAN MOTORS ARE CONNECTED IN SERIES, BOTH FANS ROTATE AT LOW SPEED.

***** HIGH SPEED OPERATION

WHEN THE WATER TEMP. REACHES APPROX. 90˚C (194˚F) OR MORE (A/C WATER TEMP. SW IS OFF) OR THE REFRIGERANT PRESSURE REACHES 15.5 KG/CM^2 (220 PSI, 1520 KPS) OR MORE (A/C HIGH PRESSURE SW IS OFF), CURRENT TO THE RADIATOR FAN RELAY NO. 1 AND CONDENSER FAN RELAY NO. 2 IS CUT OFF AND THAT TO THE MOTOR IS SUPPLIED IN PARALLEL, CAUSING THE MOTOR TO ROTATE AT HIGH SPEED.

5. AIR CONDITIONER OPERATION

WHEN THE BLOWER SW IS SET TO ON, CURRENT FROM THE 30A HEATER CB FLOWS THROUGH TERMINAL I14 (PUSH SWITCH TYPE), 5 (LEVER SWITCH TYPE) OF THE A/C SW, TERMINAL 1 OF THE A/C DUAL PRESSURE SW → TERMINAL 2 → TERMINAL 2 OF THE A/C AMPLIFIER, TERMINAL 1 OF THE MAGNET CLUTCH RELAY VIA THE A/C FUSE. THE ENGINE SPEED SIGNAL FROM IGNITER, THE EVAPORATOR TEMP. SIGNAL FROM THE A/C THERMISTOR, AND THE LOCK SIGNAL FROM THE A/C COMPRESSOR ARE ALL SUPPLIED TO THE A/C AMPLIFIER. WHEN THE A/C SW IS TURNED ON, THE A/C SW ON SIGNAL IS SENT TO THE A/C AMPLIFIER, ACTIVATING IT AND TURNING ON THE MAGNET CLUTCH RELAY, SO THAT CURRENT FLOWS FROM TERMINAL 1 OF THE RELAY → TERMINAL 2 → MAGNET CLUTCH, CAUSING THE COMPRESSOR TO OPERATE, THEN THE MAGNET CLUTCH ACTIVATING THE COMPRESSOR. AT THE SAME TIME, THE CURRENT APPLIED TO THE A/C IDLE–UP VSV FLOWS THROUGH TERMINAL 5 OF THE AMPLIFIER, ACTIVATING THE COMPRESSOR. AT THE SAME TIME, THE CURRENT APPLIED TO THE A/C IDLE–UP VSV FLOWS THROUGH TERMINAL 5 OF THE AMPLIFIER, ACTIVATING THE VSV TO PREVENT ENGINE SPEED DROP IN A/C OPERATION. THE A/C OPERATION IS SHUT OFF WHEN A SIGNAL INDICATING LOW EVAPORATOR TEMP., GREAT DIFFERENCE BETWEEN THE ENGINE AND COMPRESSOR SPEEDS, HIGH WATER TEMP. SIGNAL, OR ABNORMALLY HIGH OR LOW REFRIGERANT PRESSURE, IS SUPPLIED WHILE THE ENGINE HIGH SPEED SIGNAL EXISTS. WHEN ONE OF THESE SIGNALS IS RECEIVED, THE AMPLIFIER SHUTS OFF THE A/C OPERATION.

WHEN THE VEHICLE SPEED IS 25 KM/H (16 MPH) OR LESS AND THE THROTTLE OPENING ANGLE IS APPROX. 80% OR MORE, OPERATION OF THE A/C ACCELERATION CUT AMPLIFIER STOPS A/C OPERATION FOR APPROX. 3 SECONDS.

WHEN THE DIFFERENCE BETWEEN THE ENGINE AND COMPRESSOR SPEED IS EXCESSIVE, THE AMPLIFIER TURNS ON THE A/C SW INDICATOR LIGHT TO INDICATE A FAULT.

RADIATOR FAN AND AIR CONDITIONER (3S–FE LEVER SWITCH TYPE)

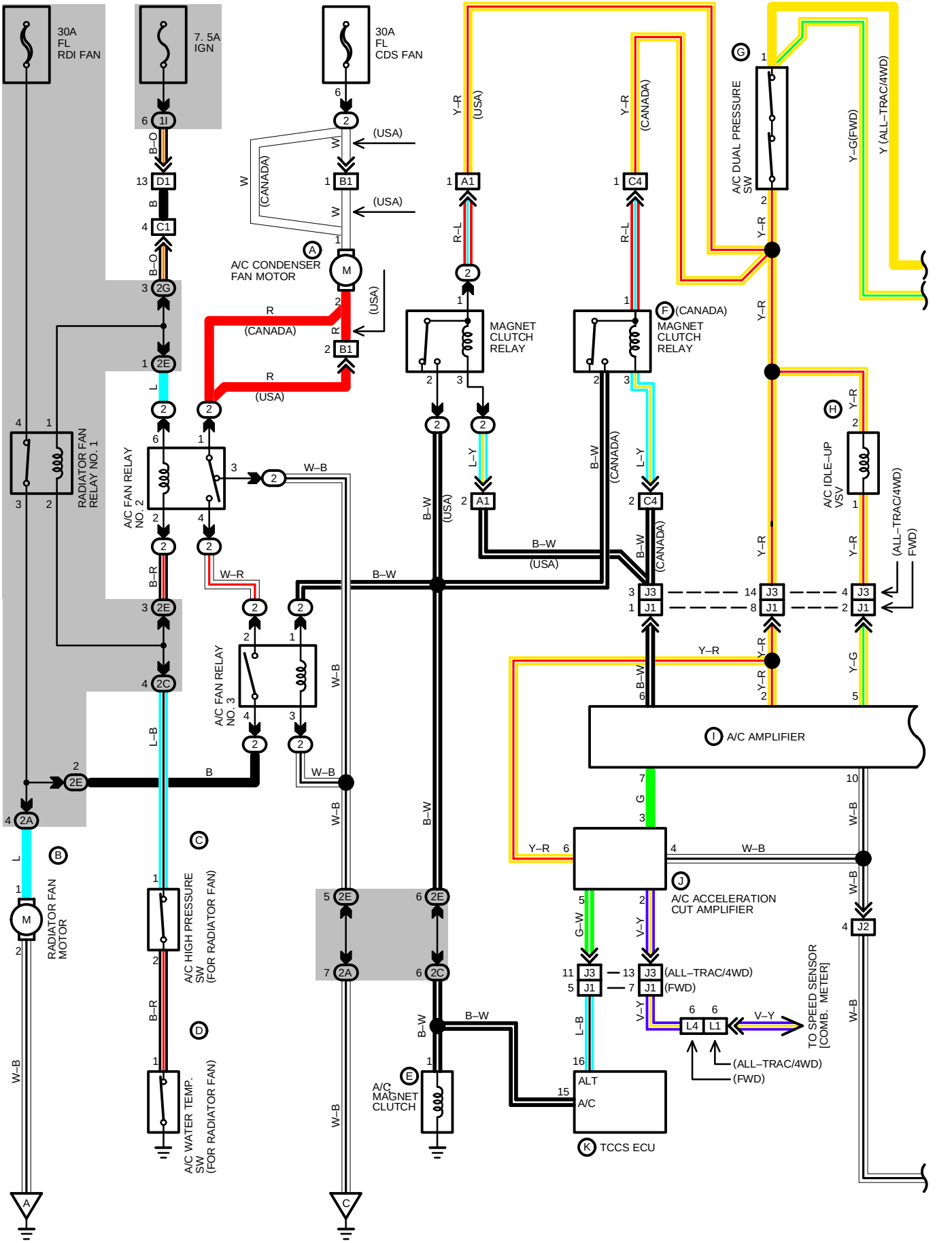

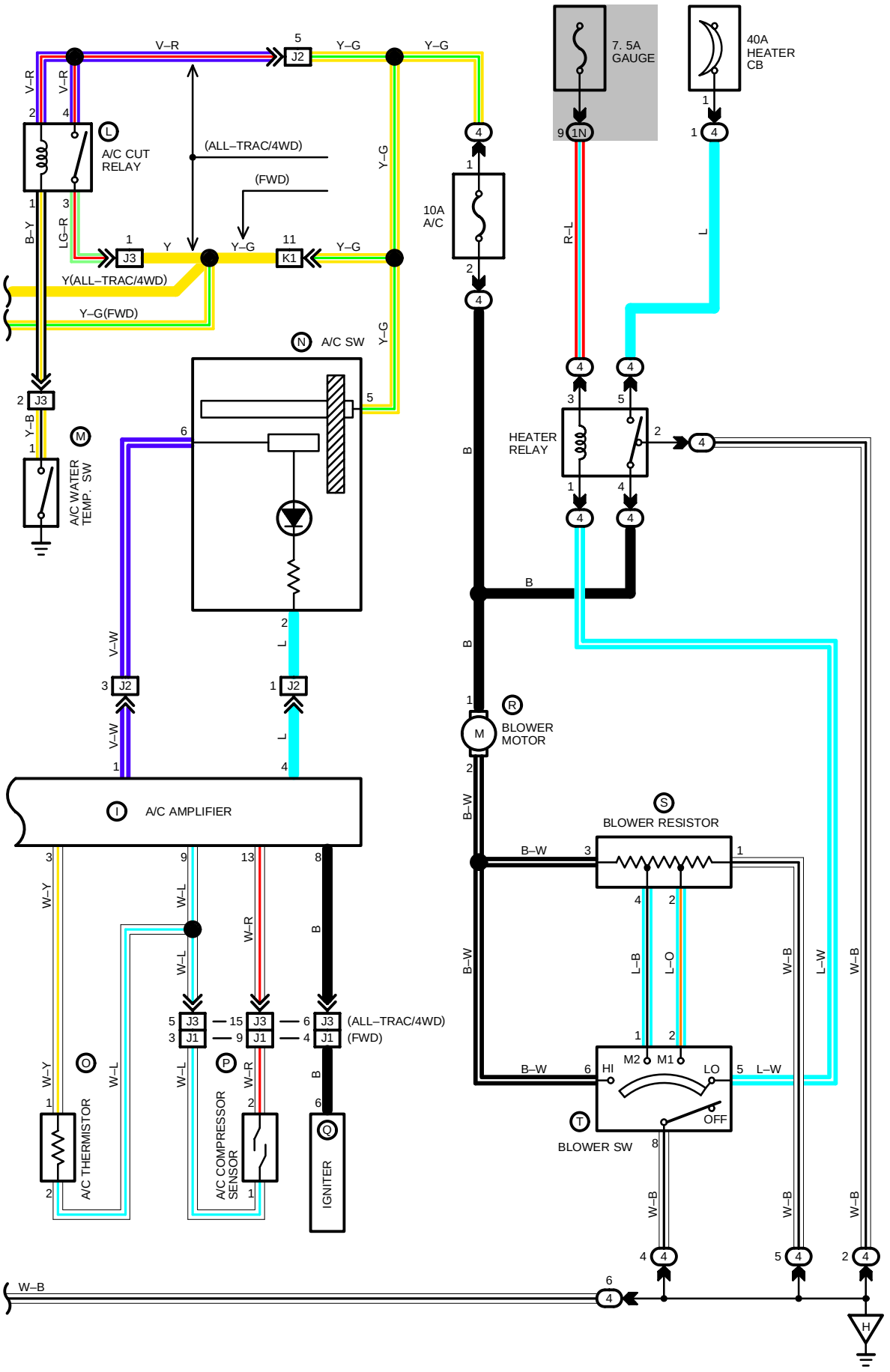

7. 5A GAUGE
40A HEATER CB
A/C CUT RELAY
(ALL–TRAC/4WD)
(FWD)
10A A/C
Y(ALL–TRAC/4WD)
Y–G(FWD)
A/C SW
A/C WATER TEMP. SW
HEATER RELAY
BLOWER MOTOR
A/C AMPLIFIER
BLOWER RESISTOR
BLOWER SW
A/C THERMISTOR
A/C COMPRESSOR SENSOR
IGNITER
(ALL–TRAC/4WD)
(FWD)

RADIATOR FAN AND AIR CONDITIONER (3S–FE LEVER SWITCH TYPE)

SERVICE HINTS

RADIATOR FAN RELAY NO. 1
4–3 : OPEN WITH IGNITIION SW ON, A/C HIGH PRESSURE SW ON AND WATER TEMP. SW ON

A/C FAN RELAY NO. 2
(2) 1–**(2)** 3 : CLOSED WITH IGNITION SW OFF OR A/C HIGH PRESSURE SW OFF OR WATER TEMP. SW OFF
(2) 1–**(2)** 4 : CLOSED WITH IGNITION SW ON, A/C HIGH PRESSURE SW ON AND WATER TEMP. SW ON

A/C FAN RELAY NO. 3
(2) 2–**(2)** 4 : CLOSED WITH IGNITION SW ON AND MAGNET CLUTCH ON

HEATER RELAY
(4) 4–**(4)** 5 : CLOSED WITH IGNITION SW ON AND BLOWER SW ON

(C) A/C HIGH PRESSURE SW (FOR RADIATOR FAN)
1–2 : OPEN ABOVE **18** KG/CM^2 (**256** PSI, **1765** KPA)
CLOSED BELOW **14** KG/CM^2 (**199** PSI, **1373** KPA)

(D) A/C WATER TEMP. SW (FOR RADIATOR FAN)
1–GROUND : OPEN ABOVE **90**˚C (**194**˚F)
CLOSED BELOW **83**˚C (**181**˚F)

(G) A/C DUAL PRESSURE SW
1–2 : OPEN WITH PRESSURE LESS THAN **2.1** KG/CM^2 (**30** PSI, **206** KPA) OR ABOVE **27** KG/CM^2 (**384** PSI, **2648** KPA)

(H) A/C IDLE–UP VSV
1–2 : APPROX. **40** Ω

(J) A/C ACCELERATION CUT AMPLIFIER
3–GROUND : APPROX. **12** VOLTS FOR **3** SECONDS WITH THROTTLE VALVE OPENING ABOVE **80**% AND VEHICLE SPEED BELOW **25** KM/H (**15.5** MPH)

(O) A/C THERMISTOR
APPROX. **1.5** KΩ AT **25**˚C (**77**˚F)

(S) BLOWER RESISTOR
1–2 : APPROX. **1.5** Ω
2–4 : APPROX. **0.8** Ω
3–4 : APPROX. **0.4** Ω

○ : PARTS LOCATION

CODE		SEE PAGE	CODE		SEE PAGE	CODE		SEE PAGE
A	A8	25	**H**	A11	25	**N**	H6	28
B	R1	25	**I**	A19	25 (FWD)	**O**	A24	28
C	A10	25	**I**	A20	28 (ALL–TRAC/4WD)	**P**	A7	25
D	A13	25	**J**	A18	28	**Q**	I2	25
E	A12	25	**K**	T3	28	**R**	B5	28
F	A43	25 (CANADA)	**L**	A21	28	**S**	B6	28
G	A9	25	**M**	A14	25 (ALL–TRAC/4WD)	**T**	H7	28

▭ : RELAY BLOCKS

CODE	SEE PAGE	RELAY BLOCKS (RELAY BLOCK LOCATION)
2	20	R/B NO. 2 (ENGINE COMPARTMENT LEFT)
4	23	R/B NO. 4 (RIGHT KICK PANEL)

▭ : JUNCTION BLOCK AND WIRE HARNESS CONNECTOR

CODE	SEE PAGE	JUNCTION BLOCK AND WIRE HARNESS (CONNECTOR LOCATION)
1I	18	COWL WIRE AND J/B NO. 1 (LEFT KICK PANEL)
1N		
2A	20	ENGINE ROOM MAIN WIRE AND J/B NO. 2 (ENGINE COMPARTMENT LEFT)
2C	20	ENGINE WIRE AND J/B NO. 2 (ENGINE COMPARTMENT LEFT)
2E	20	ENGINE ROOM NO. 4 WIRE AND J/B NO. 2 (ENGINE COMPARTMENT LEFT)
2G	20	ENGINE WIRE AND J/B NO. 2 (ENGINE COMPARTMENT LEFT)

: CONNECTOR JOINING WIRE HARNESS AND WIRE HARNESS

CODE	SEE PAGE	JOINING WIRE HARNESS AND WIRE HARNESS (CONNECTOR LOCATION)
A1	32	ENGINE WIRE AND ENGINE ROOM NO. 4 WIRE (NEAR J/B NO. 2)
B1	32	ENGINE ROOM MAIN WIRE AND ENGINE ROOM NO. 4 WIRE (NEAR J/B NO. 2)
C1	32	ENGINE ROOM MAIN WIRE AND ENGINE WIRE (NEAR J/B NO. 2)
C4	32	ENGINE WIRE AND ENGINE ROOM NO. 4 WIRE (NEAR J/B NO. 2)
D1	32	ENGINE ROOM WIRE AND COWL WIRE (LEFT KICK PANEL)
J1	34	ENGINE WIRE AND A/C WIRE (BEHIND GLOVE BOX)
J2	34	COWL WIRE AND A/C WIRE (BEHIND GLOVE BOX)
J3	34	ENGINE WIRE AND A/C WIRE (BEHIND GLOVE BOX)
K1	34	ENGINE WIRE AND COWL WIRE (BEHIND GLOVE BOX)
L1	34	ENGINE WIRE AND INSTRUMENT PANEL WIRE (BEHIND GLOVE BOX)
L4		

: GROUND POINTS

CODE	SEE PAGE	GROUND POINTS LOCATION
A	32	RIGHT FENDER
C	32	RADIATOR LEFT
H	34	R/B NO. 4 SET BOLT

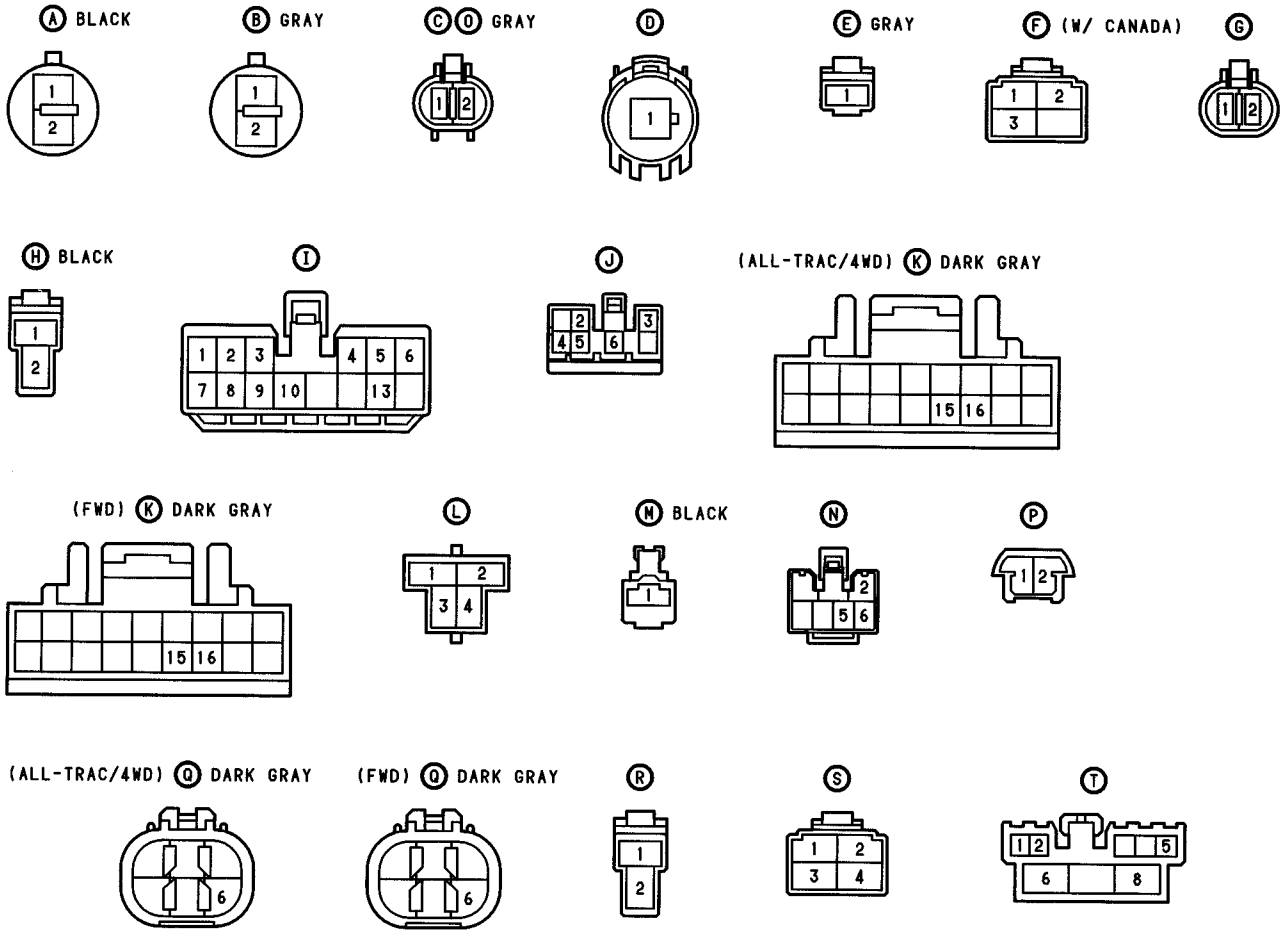

RADIATOR FAN AND AIR CONDITIONER (3S–FE PUSH SWITCH TYPE)

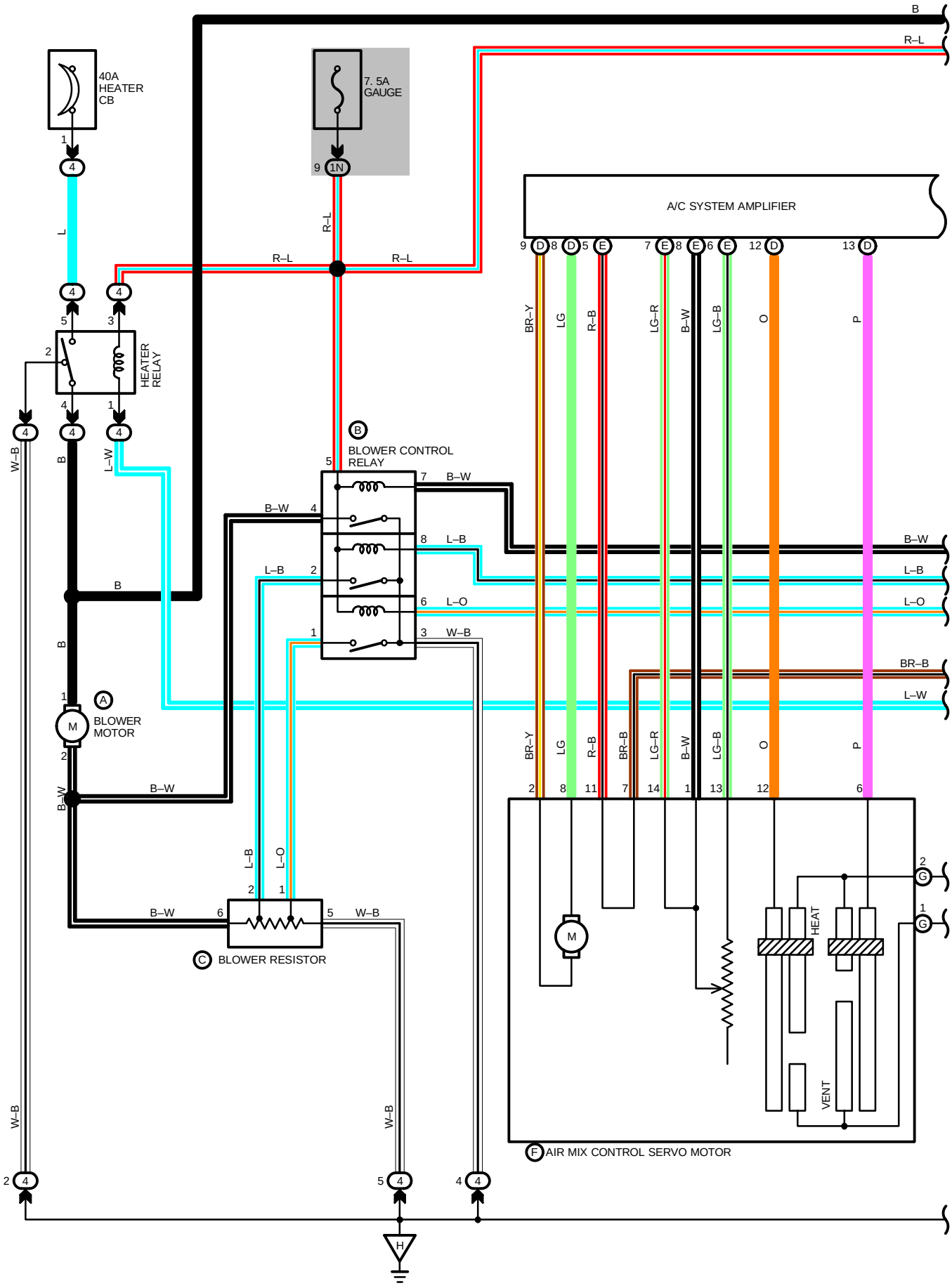

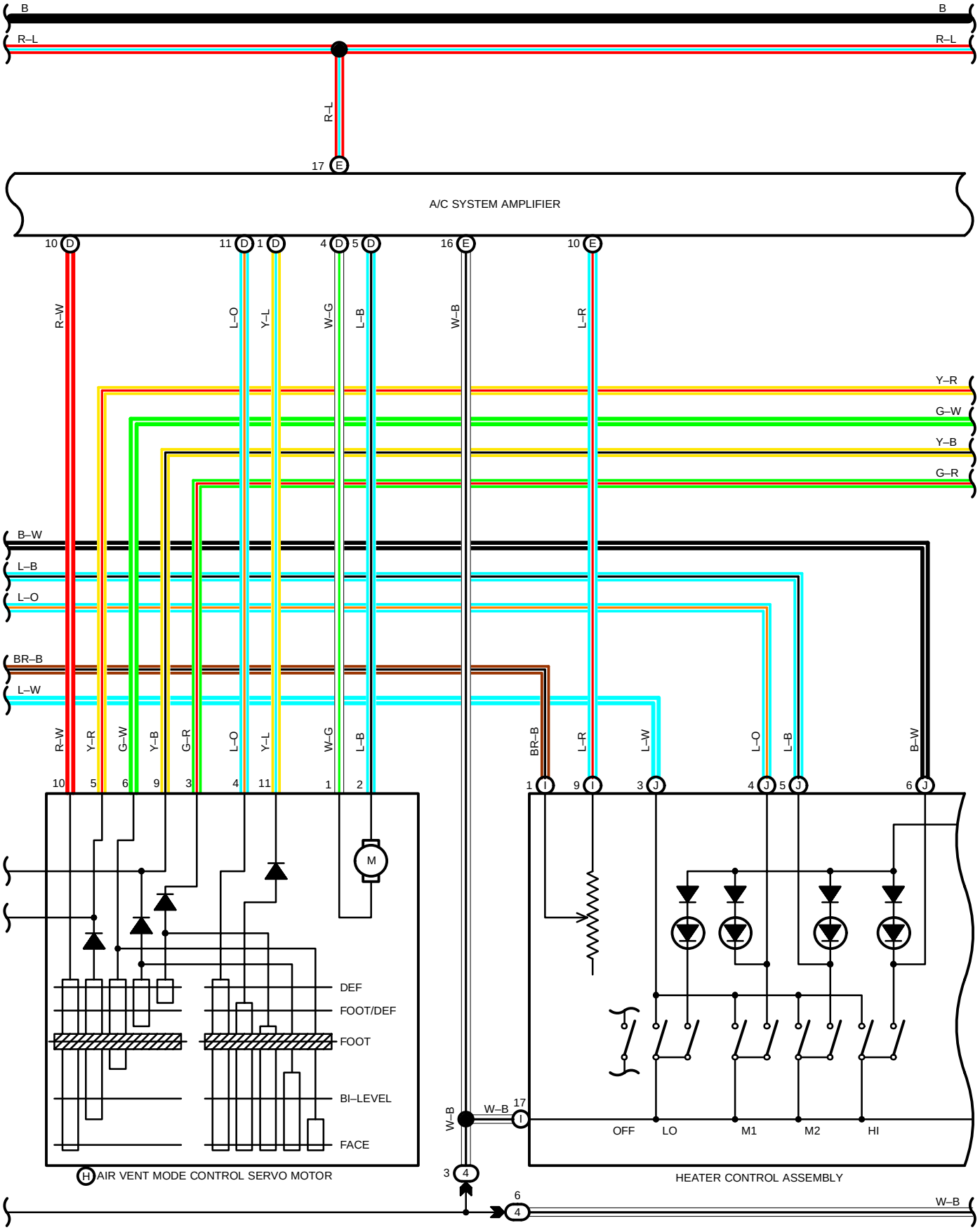
B
B
R–L
R–L
R–L
17 E
A/C SYSTEM AMPLIFIER
10 D
11 D
1 D
4 D
5 D
16 E
10 E
R–W
L–O
Y–L
W–G
L–B
W–B
L–R
Y–R
G–W
Y–B
G–R
B–W
L–B
L–O
BR–B
L–W
R–W
Y–R
G–W
Y–B
G–R
L–O
Y–L
W–G
L–B
BR–B
L–R
L–W
L–O
L–B
B–W
10
5
6
9
3
4
11
1
2
1 I
9 I
3 J
4 J
5 J
6 J
M
DEF
FOOT/DEF
FOOT
BI–LEVEL
FACE
H AIR VENT MODE CONTROL SERVO MOTOR
W–B
17
I
OFF
LO
M1
M2
HI
HEATER CONTROL ASSEMBLY
W–B
3
4
6
4
W–B

RADIATOR FAN AND AIR CONDITIONER (3S–FE PUSH SWITCH TYPE)

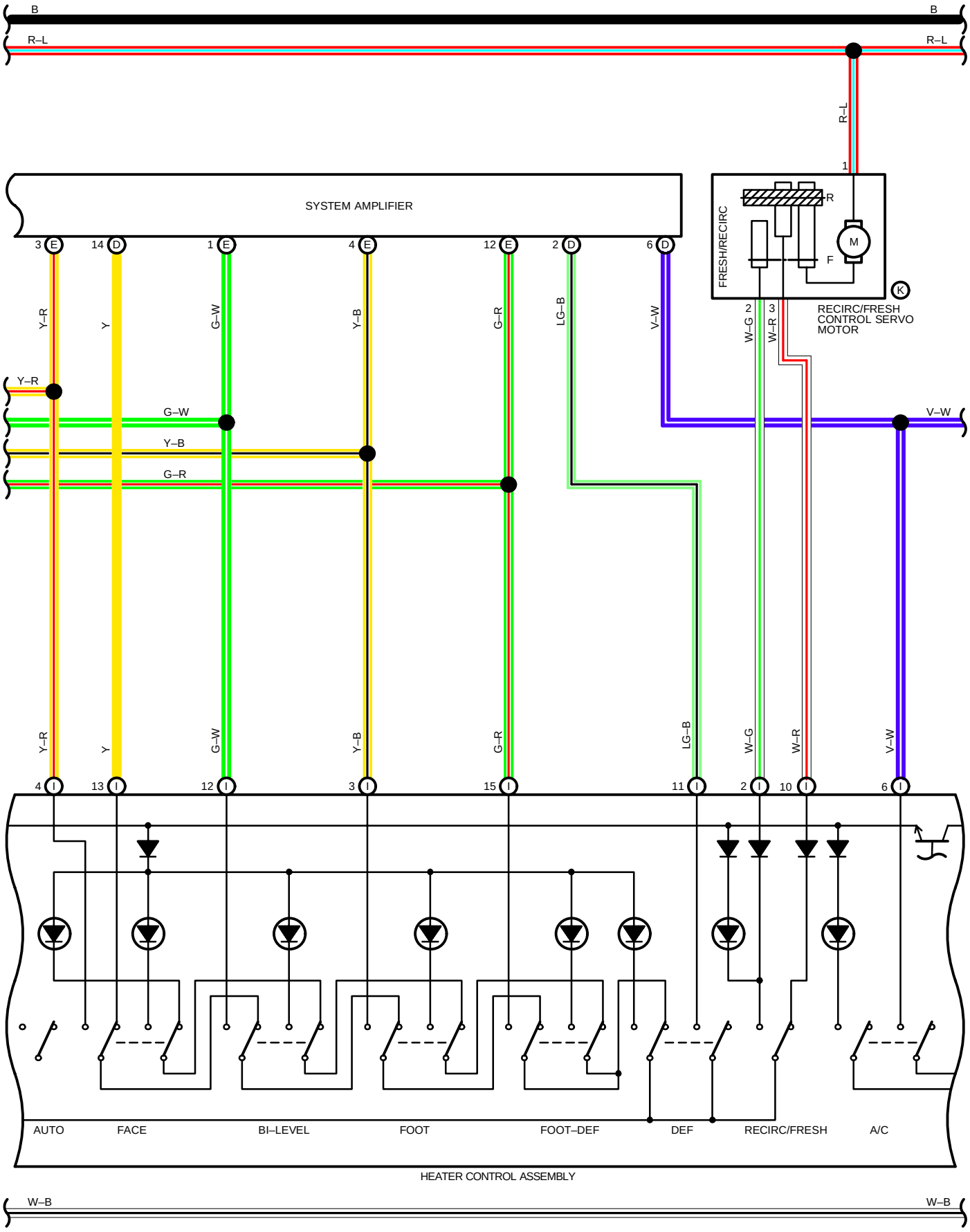

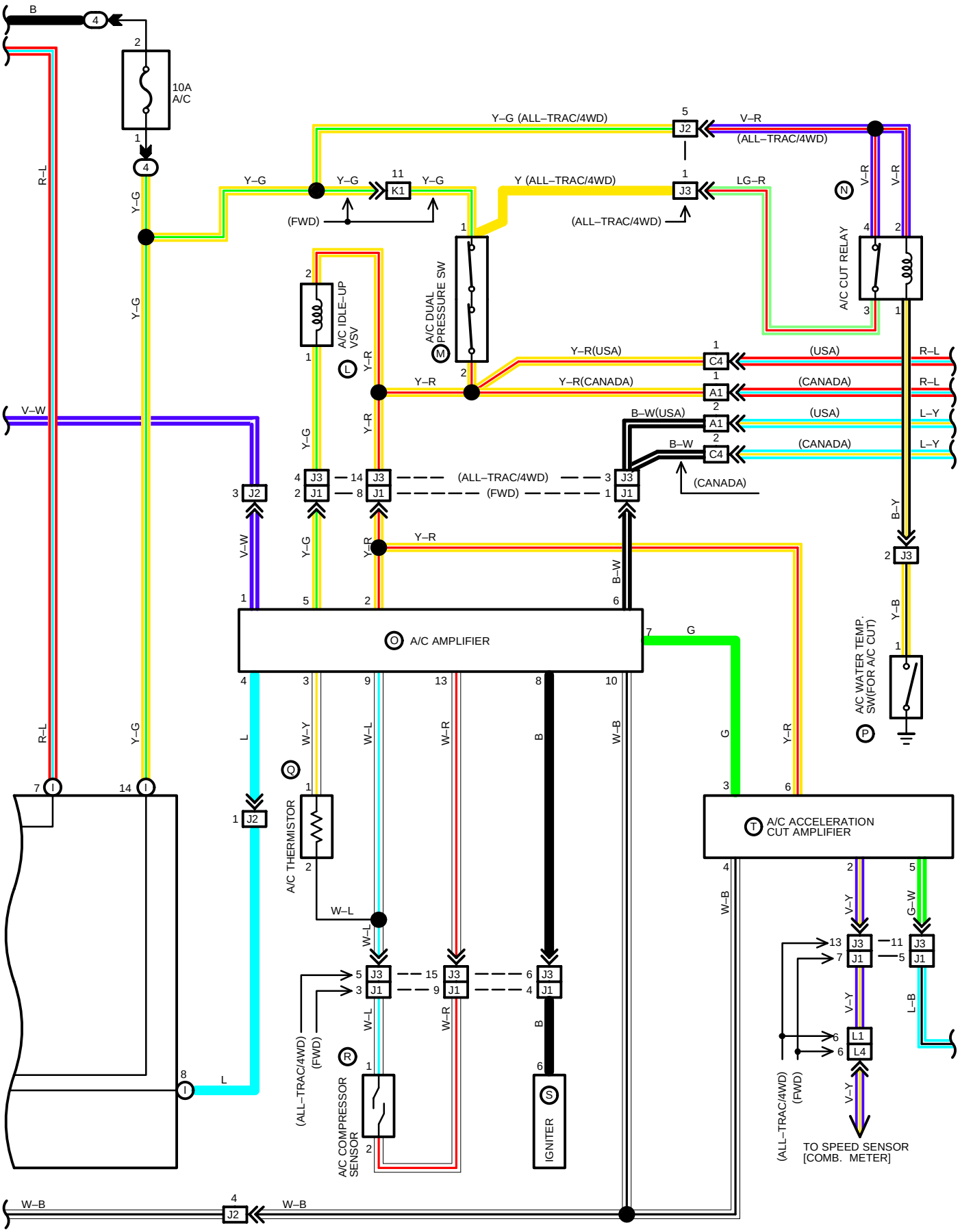
B
10A
A/C
R–L
Y–G
V–W
Y–G (ALL–TRAC/4WD)
V–R
(ALL–TRAC/4WD)
(FWD)
Y (ALL–TRAC/4WD)
LG–R
A/C CUT RELAY
A/C IDLE–UP VSV
A/C DUAL PRESSURE SW
Y–R(USA)
Y–R(CANADA)
B–W(USA)
B–W
(USA)
(CANADA)
L–Y
B–Y
A/C AMPLIFIER
A/C WATER TEMP. SW(FOR A/C CUT)
Y–B
A/C THERMISTOR
W–L
W–Y
W–R
W–B
L
G
A/C ACCELERATION CUT AMPLIFIER
V–Y
G–W
L–B
L1
L4
TO SPEED SENSOR [COMB. METER]
A/C COMPRESSOR SENSOR
IGNITER

RADIATOR FAN AND AIR CONDITIONER (3S–FE PUSH SWITCH TYPE)

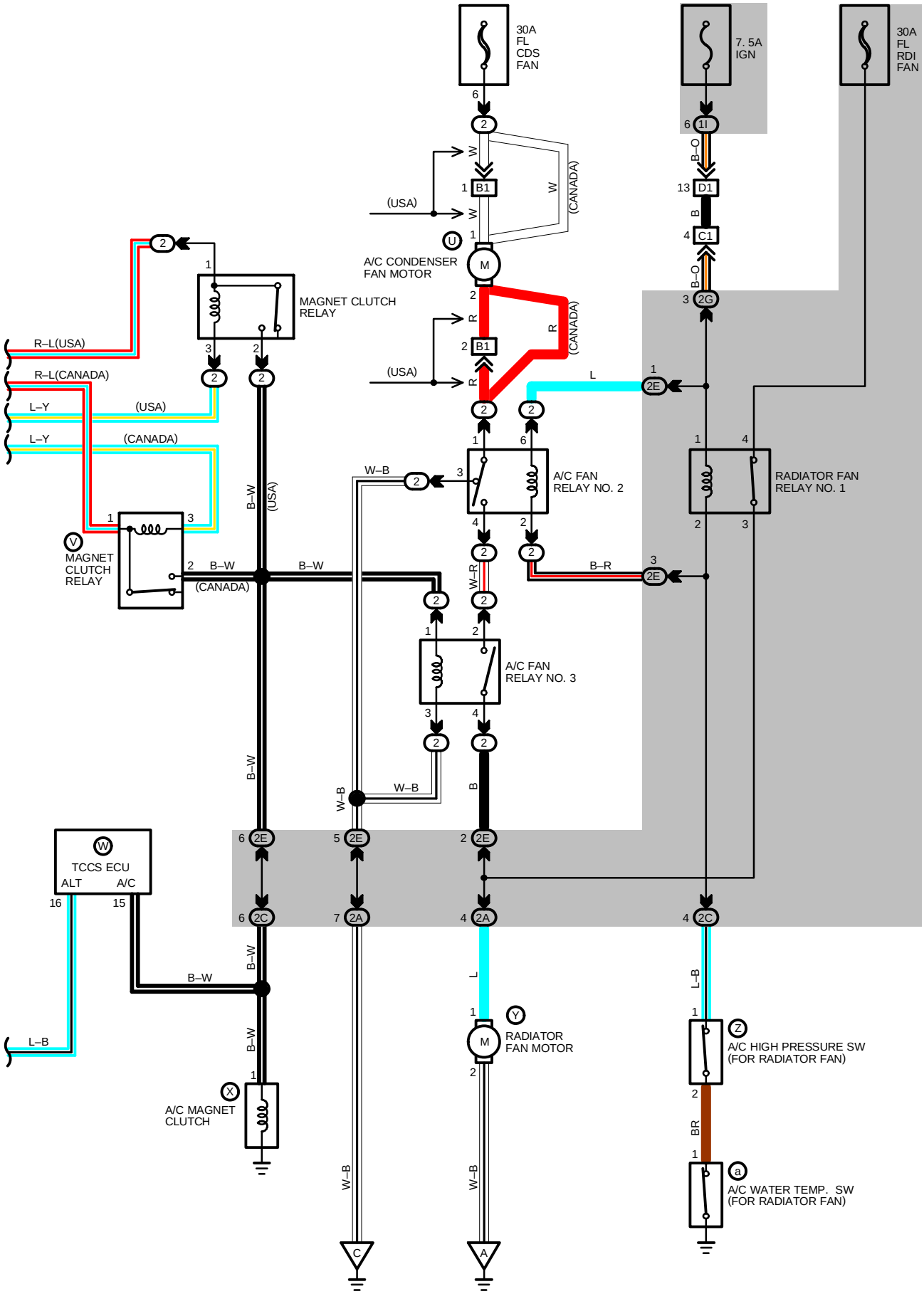

SERVICE HINTS

RADIATOR FAN RELAY NO. 1
4–3 : OPEN WITH IGNITION SW ON A/C HIGH PRESSURE SW ON OR WATER TEMP. SW ON

HEATER RELAY
(4) 4–**(4)** 5 : CLOSED WITH IGNITION SW ON AND BLOWER SW ON

(C) BLOWER RESISTOR
1–2 : APPROX. **1.20** Ω
1.5 : APPROX. **3.70** Ω
2–6 : APPROX. **0.40** Ω

(I) HEATER CONTROL ASSEMBLY
1–9 : MORE THAN **2700** Ω WITH CONTROL LEVER AT **COOL** POSITION
LESS THAN **290** Ω WITH CONTROL LEVER AT **WARM** POSITION
APPROX. **1500** Ω WITH CONTROL LEVER AT **MIDDLE** POSITION **25**°C (**77**°F)

(K) A/C IDLE–UP VSV
1–2 : APPROX. **40** Ω

(M) A/C DUAL PRESSURE SW
1–2 : OPEN WITH PRESSURE LESS THAN **2.1** KG/CM^2 (**30** PSI, **206** KPA) OR ABOVE **27** KG/CM^2 (**384** PSI, **2648** KPA)

(T) A/C ACCELERATION CUT AMPLIFIER
3–GROUND : APPROX. **12** VOLTS FOR **3** SECONDS WITH THROTTLE VALVE OPENING ABOVE **80**% AND VEHICLE SPEED BELOW **25** KM/H (**15.5** MPH)

A/C FAN RELAY NO. 2
(2) 1–**(2)** 3 : CLOSED WITH IGNITION SW OFF OR A/C HIGH PRESSURE SW OFF OR WATER TEMP. SW OFF
(2) 1–**(2)** 4 : CLOSED WITH IGNITION SW ON, A/C HIGH PRESSURE SW ON AND WATER TEMP. SW ON

A/C FAN RELAY NO. 3
(2) 2–**(2)** 4 : CLOSED WITH MAGNET CLUTCH ON

(X) A/C MAGNET CLUTCH
1–GROUND : APPROX. **3.7** Ω

(Z) A/C HIGH PRESSURE SW (FOR RADIATOR FAN)
1–2 : OPEN ABOVE **15.5** KG/CM^2 (**220** PSI, **1520** KPA)
CLOSED BELOW **12.5** KG/CM^2 (**178** PSI, **1226** KPA)

(a) A/C WATER TEMP. SW (FOR RADIATOR FAN)
1–GROUND : OPEN ABOVE **90**°C (**194**°F)
CLOSED BELOW **83**°C (**181**°F)

○ : PARTS LOCATION

CODE		SEE PAGE	CODE		SEE PAGE	CODE		SEE PAGE
A	B5	28	**K**	R8	28	**T**	A18	28
B	B4	28	**L**	A11	25	**U**	A8	25
C	B6	28	**M**	A9	25	**V**	A43	25 (CANADA)
D	A22	28	**N**	A21	28	**W**	T3	28
E	A23	28	**O**	A19	28	**X**	A12	25
F	A27	28	**O**	A20	28	**Y**	R1	25
G	A27	28	**P**	A14	25	**Z**	A10	25
H	A28	28	**Q**	A24	28	**a**	A13	25
I	H6	28	**R**	A7	25			
J	H7	28	**S**	I2	25			

⬭ : RELAY BLOCKS

CODE	SEE PAGE	RELAY BLOCKS (RELAY BLOCK LOCATION)
2	20	R/B NO. 2 (ENGINE COMPARTMENT LEFT)
4	23	R/B NO. 4 (RIGHT KICK PANEL)

⬭ : JUNCTION BLOCK AND WIRE HARNESS CONNECTOR

CODE	SEE PAGE	JUNCTION BLOCK AND WIRE HARNESS (CONNECTOR LOCATION)
1I	18	COWL WIRE AND J/B NO. 1 (LEFT KICK PANEL)
1N		
2A	20	ENGINE ROOM MAIN WIRE AND J/B NO. 2 (ENGINE COMPARTMENT LEFT)
2C	20	ENGINE WIRE AND J/B NO. 2 (ENGINE COMPARTMENT LEFT)
2E	20	ENGINE ROOM NO. 4 WIRE AND J/B NO. 2 (ENGINE COMPARTMENT LEFT)
2G	20	ENGINE WIRE AND J/B NO. 2 (ENGINE COMPARTMENT LEFT)

RADIATOR FAN AND ATR COMDITIONER (3S–FE PUSH SWITCH TYPE)

: CONNECTOR JOINING WIRE HARNESS AND WIRE HARNESS

CODE	SEE PAGE	JOINING WIRE HARNESS AND WIRE HARNESS (CONNECTOR LOCATION)
B1	32	ENGINE ROOM MAIN WIRE AND ENGINE ROOM NO. 4 WIRE (NEAR J/B NO. 2)
C1	32	ENGINE ROOM MAIN WIRE AND ENGINE WIRE (NEAR J/B NO. 2)
C4	32	ENGINE WIRE AND ENGINE ROOM MAIN WIRE (NEAR J/B NO. 2)
D1	32	ENGINE ROOM WIRE AND COWL WIRE (LEFT KICK PANEL)
J1	34	ENGINE WIRE AND A/C WIRE (BEHIND GLOVE BOX)
J2	34	COWL WIRE AND A/C WIRE (BEHIND GLOVE BOX)
J3	34	ENGINE WIRE AND A/C WIRE (BEHIND GLOVE BOX)
K1	34	ENGINE WIRE AND COWL WIRE (BEHIND GLOVE BOX)
L1	34	ENGINE WIRE AND INSTRUMENT PANEL WIRE (BEHIND GLOVE BOX)
L4		

: GROUND POINTS

CODE	SEE PAGE	GROUND POINTS LOCATION
A	32	RIGHT FENDER
C	32	RADIATOR LEFT
H	34	R/B NO. 4 SET BOLT

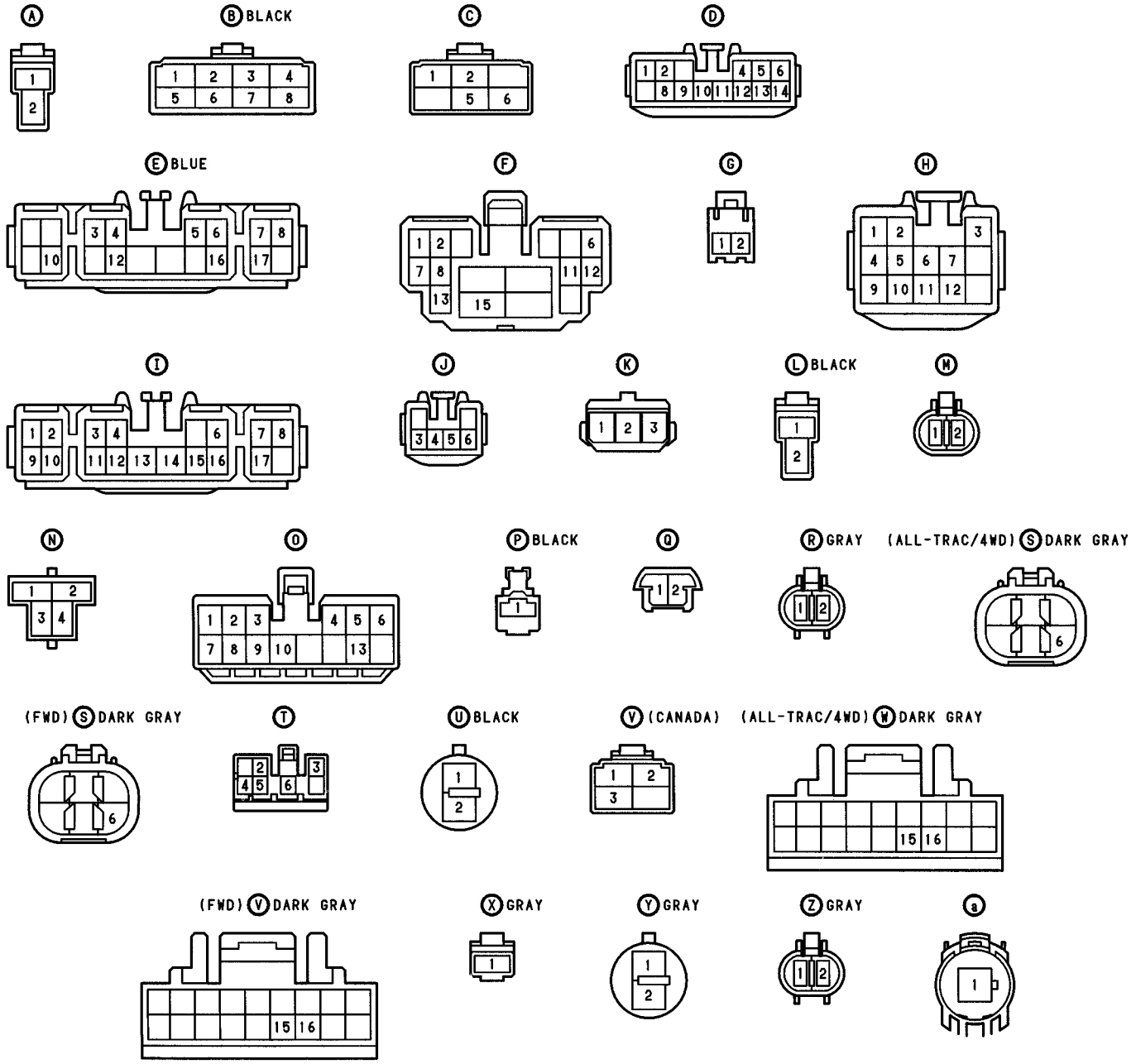

SYSTEM OUTLINE

1. RECIRC/FRESH CONTROL SERVO MOTOR OPERATION (FOR PUSH SWITCH TYPE)

(SWITCHING FROM FRESH TO RECIRC)

WITH THE IGNITION SW ON, CURRENT FROM THE GAUGE FUSE FLOWS TO TERMINAL 1 OF THE SERVO MOTOR. WHEN THE RECIRC SW IS TURNED ON, THE CURRENT FLOWS FROM SERVO MOTOR → TERMINAL 2 → TERMINAL I2 OF THE HEATER CONTROL ASSEMBLY → TERMINAL I17 → GROUND, THE MOTOR ROTATES AND THE DAMPER MOVES TO THE RECIRC SIDE. WHEN IT IS IN THE RECIRC POSITION, THE CIRCUIT IS CUT INSIDE THE SERVO MOTOR AND THE DAMPER STOPS IN THAT POSITION.

WHEN THE CIRCUIT FOR THE INDICATOR LIGHT, CURRENT FLOWS FROM THE GAUGE FUSE → TERMINAL I7 OF THE HEATER CONTROL ASSEMBLY → INDICATOR LIGHT → TERMINAL I17 → GROUND AND THE INDICATOR LIGHT CONTINUES TO LIGHT UP WHILE THE RECIRC SW IS ON.

(SWITCHING FROM RECIRC TO FRESH)

WHEN THE IGNITION IS ON AND THE FRESH SW IS TURNED ON, CURRENT FLOWS FROM TERMINAL 3 OF THE SERVO MOTOR → TERMINAL I10 OF THE HEATER CONTROL ASSEMBLY → TERMINAL I17 → GROUND, THE MOTOR ROTATES AND THE DAMPER MOVES TO THE FRESH SIDE. WHEN THE DAMPER IS IN THE FRESH POSITION, THE CIRCUIT IS CUT INSIDE THE SERVO MOTOR AND THE DAMPER STOPS IN THAT POSITION.

2. OPERATION OF THE AIR VENT MODE CONTROL SERVO MOTOR (FOR PUSH SWITCH TYPE)

(SWITCHING FROM FACE TO BI–LEVEL)

WHEN THE BI–LEVEL SW IS TURNED ON WITH THE DAMPER IN THE FACE POSITION, A SIGNAL THAT THE CIRCUIT IS GROUNDED IS OUTPUT FROM TERMINAL I12 OF THE HEATER CONTROL ASSEMBLY → TERMINAL 6 OF THE SERVO MOTOR → TERMINAL D11 OF THE SYSTEM AMPLIFIER. (AT THIS TIME, THE CURRENT FLOWING THROUGH TERMINAL I7 OF THE HEATER CONTROL ASSEMBLY FLOWS THROUGH TERMINAL I17 → GROUND, CAUSING THE INDICATOR LIGHT TO LIGHT UP). AT THE SAME TIME, THE SIGNAL FOR WHEN THE CIRCUIT IS NOT GROUNDED IS INPUT TO TERMINAL D10 OF THE AMPLIFIER. THESE 2 SIGNALS CAUSE THE AMPLIFIER TO OPERATE AND CURRENT FLOWS FROM TERMINAL D5 OF THE AMPLIFIER → SERVO MOTOR → TERMINAL D4 → GROUND, WHICH ROTATES THE SERVO MOTOR, CAUSING THE DAMPER TO MOVE TO THE BI–LEVEL POSITION.

WHEN THE DAMPER COMES TO THE BI–LEVEL POSITION, A SIGNAL THAT THE GROUND CIRCUIT IS CUT IS INPUT TO TERMINAL D11 OF THE AMPLIFIER, AND AMPLIFIER OPERATION CAUSES THE SERVO MOTOR TO STOP ROTATING AND THE DAMPER TO STAY IN POSITION.

(SWITCHING TO OTHER MODE POSITIONS)

WHEN SWITCHING THE DAMPER FROM FACE TOWARDS DEF, AS EXPLAINED BEFORE, A GROUND SIGNAL IS INPUT TO TERMINAL D11 OF THE AMPLIFIER AND A NON–GROUND SIGNAL IS INPUT TO TERMINAL D10 SO THAT CURRENT FLOWS FROM TERMINAL D5 → SERVO MOTOR → TERMINAL D4, MOVING THE DAMPER TO THE DESIRED POSITION.

WHEN SWITCHING THE DAMPER IN THE OPPOSITE DIRECTION FROM DEF TOWARDS FACE, A GROUND SIGNAL IS INPUT TO TERMINAL D10 OF THE AMPLIFIER AND A NON–GROUND SIGNAL IS INPUT TO TERMINAL D11 SO THAT THE CURRENT FLOWS FROM TERMINAL D4 → SERVO MOTOR → TERMINAL D5, CAUSING THE SERVO MOTOR TO ROTATE IN REVERSE AND MOVING THE DAMPER TO THE DESIRED POSITION.

3. OPERATION OF THE AIR MIX CONTROL SERVO MOTOR (FOR PUSH SWITCH TYPE)

(SWITCHING FROM WARM TO COOL)

WHEN THE TEMPERATURE CONTROL KNOB IS SWITCHED FROM WARM POSITION TO COOL POSITION, THE RESISTANCE INSIDE THE HEATER CONTROL ASSEMBLY BECOMES GREATER THAN THE RESISTANCE INSIDE THE SERVO MOTOR. THE SIGNAL AT THIS TIME IS INPUT TO THE SYSTEM AMPLIFIER, CAUSING THE AMPLIFIER TO OPERATE. CURRENT FLOWS FROM TERMINAL D8 OF THE AMPLIFIER → SERVO MOTOR → TERMINAL D9 → GROUND, CHANGING THE DAMPER FROM WARM TO COOL POSITION. WHEN THE RESPECTIVE RESISTANCES ARE THE SAME VALVE, THE SERVO MOTOR STOP.

(SWITCHING FROM COOL TO WARM)

WHEN THE TEMPERATURE CONTROL KNOB IS SWITCHED FROM COOL POSITION TO WARM POSITION, THE RESISTANCE INSIDE THE HEATER CONTROL ASSEMBLY BECOMES LESS THAN THE RESISTANCE INSIDE THE SERVO MOTOR. THE SIGNAL AT THIS TIME IS INPUT TO THE SYSTEM AMPLIFIER, CAUSING THE AMPLIFIER TO OPERATE. CURRENT FLOWS FROM TERMINAL D9 OF THE AMPLIFIER → SERVO MOTOR → TERMINAL D8 → GROUND, CHANGING THE DAMPER FROM COOL TO WARM POSITION. WHEN THE RESPECTIVE RESISTANCES ARE THE SAME VALVE, THE SERVO MOTOR STOPS.

4. RADIATOR FAN AND CONDENSER FAN OPERATION

WHEN THE IGNITION SW IS ON, TURNING THE ENGINE MAIN RELAY TO ON CAUSES CURRENT TO FLOW TO THE RAD FAN FUSE AND THE CDS FAN FUSE.

***** LOW SPEED OPERATION

OPERATION OF THE A/C CONDENSER FAN CONTROL AMPLIFIER TURNS RADIATOR FAN RELAY NO. 1 AND A/C FAN RELAY NO. 2 AND NO. 3 TO ON, AND CURRENT FROM THE CDS FAN FUSE FLOWS IN SERIES FROM THE CONDENSER FAN MOTOR → TERMINAL 1 OF THE A/C FAN RELAY NO. 2 → TERMINAL 4 → TERMINAL 2 OF A/C FAN RELAY NO. 3 → TERMINAL 4 → RADIATOR FAN MOTOR → GROUND, CAUSING EACH FAN TO ROTATE AT LOW SPEED. [THIS IS WHEN THE WATER TEMP. IS APPROX. 85˚ TO 90˚C (185˚ TO 194˚F).]

***** HIGH SPEED OPERATION

OPERATION OF THE A/C CONDENSER FAN AMPLIFIER AND HIGH PRESSURE SW CAUSES CURRENT TO THE COIL SIDE OF RADIATOR FAN RELAY NO. 1 AND A/C FAN RELAY NO. 2 TO BE CUT (BOTH RELAYS OFF). ACCORDINGLY, CURRENT FROM THE RAD FAN FUSE FLOWS FROM TERMINAL 4 OF RADIATOR FAN RELAY NO. 1 → TERMINAL 3 → RADIATOR FAN MOTOR → GROUND, AND CURRENT FROM THE CDS FAN FUSE FLOWS FROM THE CONDENSER FAN MOTOR → TERMINAL 1 OF A/C FAN RELAY NO. 2 → TERMINAL 3 → GROUND. THIS PARALLEL CURRENT FLOW TO BOTH MOTORS CAUSES BOTH FANS TO ROTATE AT HIGH SPEED. [THIS IS WHEN THE WATER TEMP. IS APPROX. 90˚C (194˚F) OR MORE WITH THE MAGNET CLUTCH OFF, OR ELSE WITH THE MAGNET CLUTCH ON AND THE REFRIGERANT PRESSURE AT 15.5 KG/CM^2 (220 PSI, 1520 KPS) OR MORE.]

5. AIR CONDITIONER OPERATION

WHEN THE BLOWER SW IS SET TO ON, CURRENT FROM THE 30A HEATER CB FLOWS THROUGH TERMINAL I14 (PUSH SWITCH TYPE), 5 (LEVER SWITCH TYPE) OF THE A/C SW, TERMINAL 1 OF THE A/C DUAL PRESSURE SW → TERMINAL 2 → TERMINAL 14 OF THE A/C AMPLIFIER, TERMINAL 1 OF THE MAGNET CLUTCH RELAY VIA THE A/C FUSE. THE ENGINE SPEED SIGNAL FROM IGNITER, THE EVAPORATOR TEMP. SIGNAL FROM THE A/C THERMISTOR, AND THE LOCK SIGNAL FROM THE A/C COMPRESSOR ARE ALL SUPPLIED TO THE A/C AMPLIFIER. WHEN THE A/C SW IS TURNED ON, THE A/C SW ON SIGNAL IS SENT TO THE A/C AMPLIFIER, ACTIVATING IT AND TURNING ON THE MAGNET CLUTCH RELAY, SO THAT CURRENT FLOWS FROM TERMINAL 1 OF THE RELAY → TERMINAL 2 → MAGNET CLUTCH, CAUSING THE COMPRESSOR TO OPERATE, THEN THE MAGNET CLUTCH ACTIVATING THE COMPRESSOR. THE A/C OPERATION IS SHUT OFF WHEN A SIGNAL INDICATING LOW EVAPORATOR TEMP., GREAT DIFFERENCE BETWEEN THE ENGINE AND COMPRESSOR SPEEDS, HIGH WATER TEMP. SIGNAL, OR ABNORMALLY HIGH OR LOW REFRIGERANT PRESSURE, IS SUPPLIED WHILE THE ENGINE HIGH SPEED SIGNAL EXISTS. WHEN ONE OF THESE SIGNALS IS RECEIVED, THE AMPLIFIER SHUTS OFF THE A/C OPERATION.

WHEN THE DIFFERENCE BETWEEN THE ENGINE AND COMPRESSOR SPEED IS EXCESSIVE, THE AMPLIFIER TURNS ON THE A/C SW INDICATOR LIGHT TO INDICATE A FAULT.

RADIATOR FAN AND AIR CONDITIONER (2VZ–FE LEVER SWITCH TYPE)

SERVICE HINTS

RADIATOR FAN RELAY NO. 1
4–3 : OPEN WITH IGNITION SW ON, A/C HIGH PRESSURE SW ON AND WATER TEMP. SW ON

A/C FAN RELAY NO. 2
(2) 1–**(2)** 3 : CLOSED WITH IGNITION SW OFF OR A/C HIGH PRESSURE SW OFF
(2) 1–**(2)** 4 : CLOSED IGNITION SW ON AND A/C HIGH PRESSURE SW ON

A/C FAN RELAY NO. 3
(2) 2–**(2)** 4 : CLOSED WITH IGNITION SW ON AND MAGNET CLUTCH ON

(C) A/C HIGH PRESSURE SW (FOR RADIATOR FAN)
1–2 : OPEN ABOVE **18** Kg/CM^2 (**256** PSI, **1765** KPA)
CLOSED BELOW **14** Kg/CM^2 (**199** PSI, **1373** KPA)

(L) A/C DUAL PRESSURE SW
1–2 : OPEN WITH PRESSUR LESS THAN **2.1** Kg/CM^2 (**30** PSI, **206** KPA) OR ABOVE **27** Kg/CM^2 (**384** PSI, **2648** KPA)

(G) A/C WATER TEMP. SW (FOR RADIATOR FAN)
1–GROUND : OPEN ABOVE **90**˚C (**194**˚F)
CLOSED BELOW **83**˚C (**181**˚F)

(P) A/C THERMISTOR
1–2 : APPROX. **1.5** KΩ AT **25**˚C (**77**˚F)

HEATER RELAY
(4) 4–**(4)** 5 : CLOSED WITH IGNITION SW ON AND BLOWER SW ON

(T) BLOWER RESISTOR
1–2 : APPROX. **1.5** Ω
2–4 : APPROX. **0.8** Ω
3–4 : APPROX. **0.4** Ω

: PARTS LOCATION

CODE		SEE PAGE	CODE		SEE PAGE	CODE		SEE PAGE
A	A8	24	**G**	A13	24 (W/O A/C)	**O**	A25	28
B	R1	24	**H**	A21	28	**P**	A25	28
C	A10	24 (W/ A/C)	**I**	A43	24 (CANADA)	**Q**	A7	24
C	A10	24 (W/O A/C)	**J**	T4	28	**R**	I3	24
D	S1	24	**K**	T2	28	**S**	B5	28
E	A12	24	**L**	A9	24	**T**	B6	28
F	A18	28	**M**	H6	28	**U**	H7	28
G	A13	24 (W/ A/C)	**N**	A19	28			

: RELAY BLOCKS

CODE	SEE PAGE	RELAY BLOCKS (RELAY BLOCK LOCATION)
2	20	R/B NO. 2 (ENGINE COMPARTMENT LEFT)
4	23	R/B NO. 4 (RIGHT KICK PANEL)

: JUNCTION BLOCK AND WIRE HARNESS CONNECTOR

CODE	SEE PAGE	JUNCTION BLOCK AND WIRE HARNESS (CONNECTOR LOCATION)
1I	18	COWL WIRE AND J/B NO. 1 (LEFT KICK PANEL)
1N		
2A	20	ENGINE ROOM MAIN WIRE AND J/B NO. 2 (ENGINE COMPARTMENT LEFT)
2C	20	ENGINE WIRE AND J/B NO. 2 (ENGINE COMPARTMENT LEFT)
2E	20	ENGINE ROOM NO. 4 WIRE AND J/B NO. 2 (ENGINE COMPARTMENT LEFT)
2G	20	ENGINE WIRE AND J/B NO. 2 (ENGINE COMPARTMENT LEFT)

: CONNECTOR JOINING WIRE HARNESS AND WIRE HARNESS

CODE	SEE PAGE	JOINING WIRE HARNESS AND WIRE HARNESS (CONNECTOR LOCATION)
A2	30	ENGINE WIRE AND ENGINE ROOM NO. 4 WIRE (NEAR J/B NO. 2)
C1	30	ENGINE ROOM MAIN WIRE AND ENGINE WIRE (NEAR J/B NO. 2)
C5	30	ENGINE WIRE AND ENGINE ROOM MAIN WIRE (NEAR J/B NO. 2)
D1	30	ENGINE ROOM WIRE AND COWL WIRE (LEFT KICK PANEL)
J2	34	COWL WIRE AND A/C WIRE (BEHIND GLOVE BOX)
J3	34	ENGINE WIRE AND A/C WIRE (BEHIND GLOVE BOX)
K1	34	ENGINE WIRE AND COWL WIRE (BEHIND GLOVE BOX)

RADIATOR FAN AND AIR CONDITIONER (2VZ–FE LEVER SWITCH TYPE)

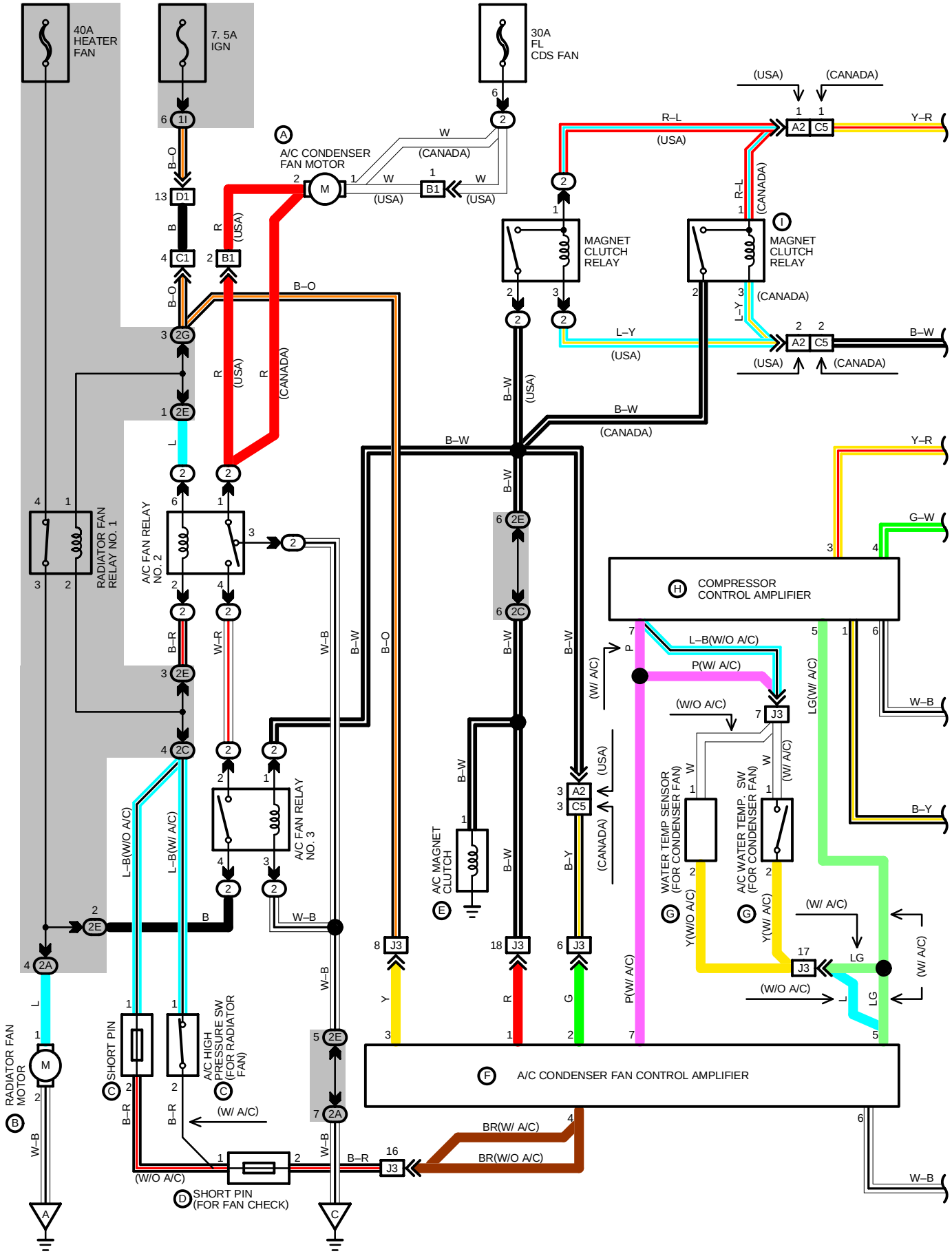

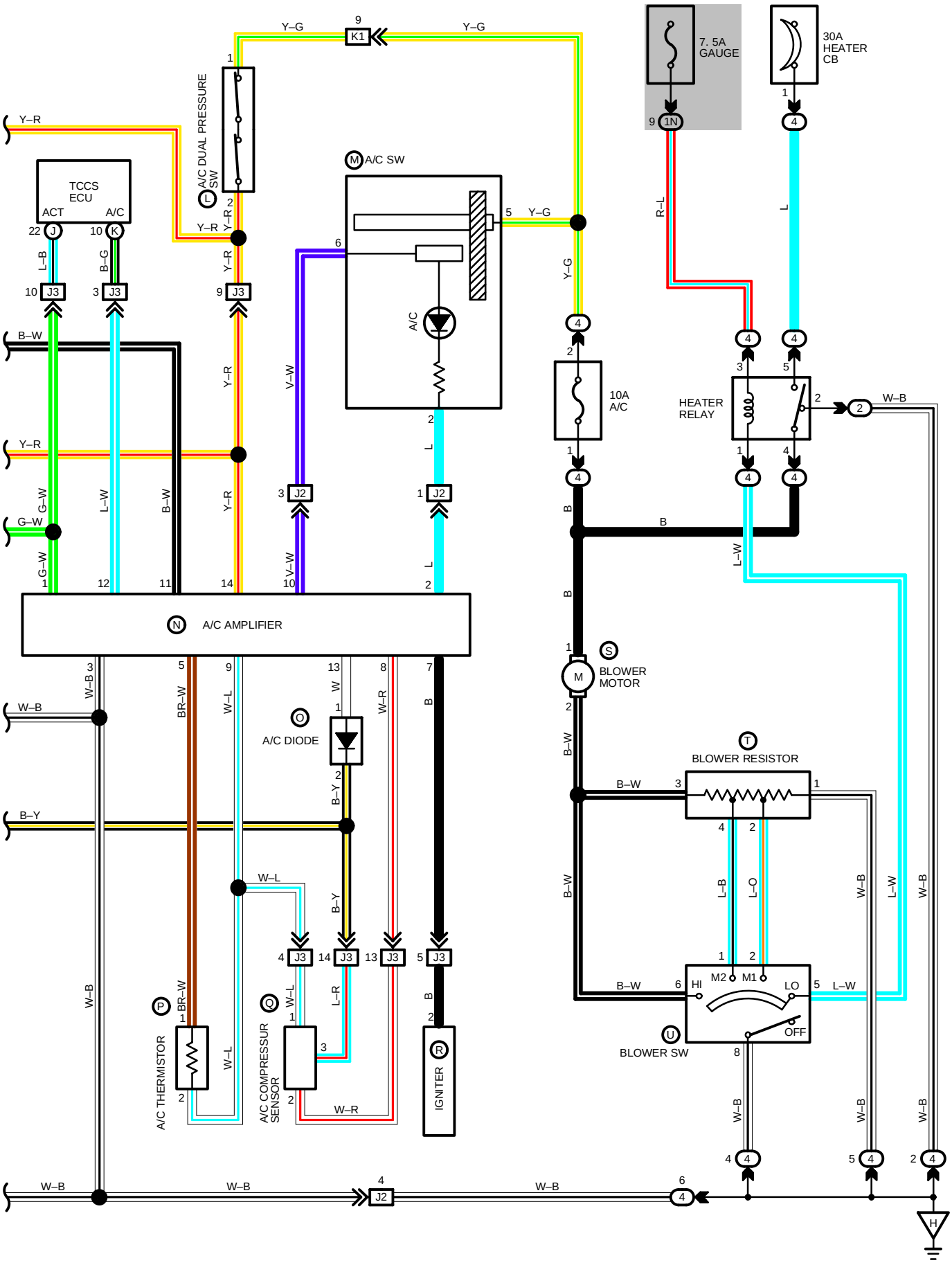

7. 5A GAUGE
30A HEATER CB
A/C DUAL PRESSURE SW
A/C SW
TCCS ECU
ACT
A/C
10A A/C
HEATER RELAY
A/C AMPLIFIER
BLOWER MOTOR
A/C DIODE
BLOWER RESISTOR
BLOWER SW
A/C THERMISTOR
A/C COMPRESSUR SENSOR
IGNITER

RADIATOR FAN AND AIR CONDITIONER (2VZ–FE LEVER SWITCH TYPE)

▽ : GROUND POINTS

CODE	SEE PAGE	GROUND POINTS LOCATION
A	30	RIGHT FENDER
C	30	RADIATOR LEFT
H	34	R/B NO. 4 SET BOLT

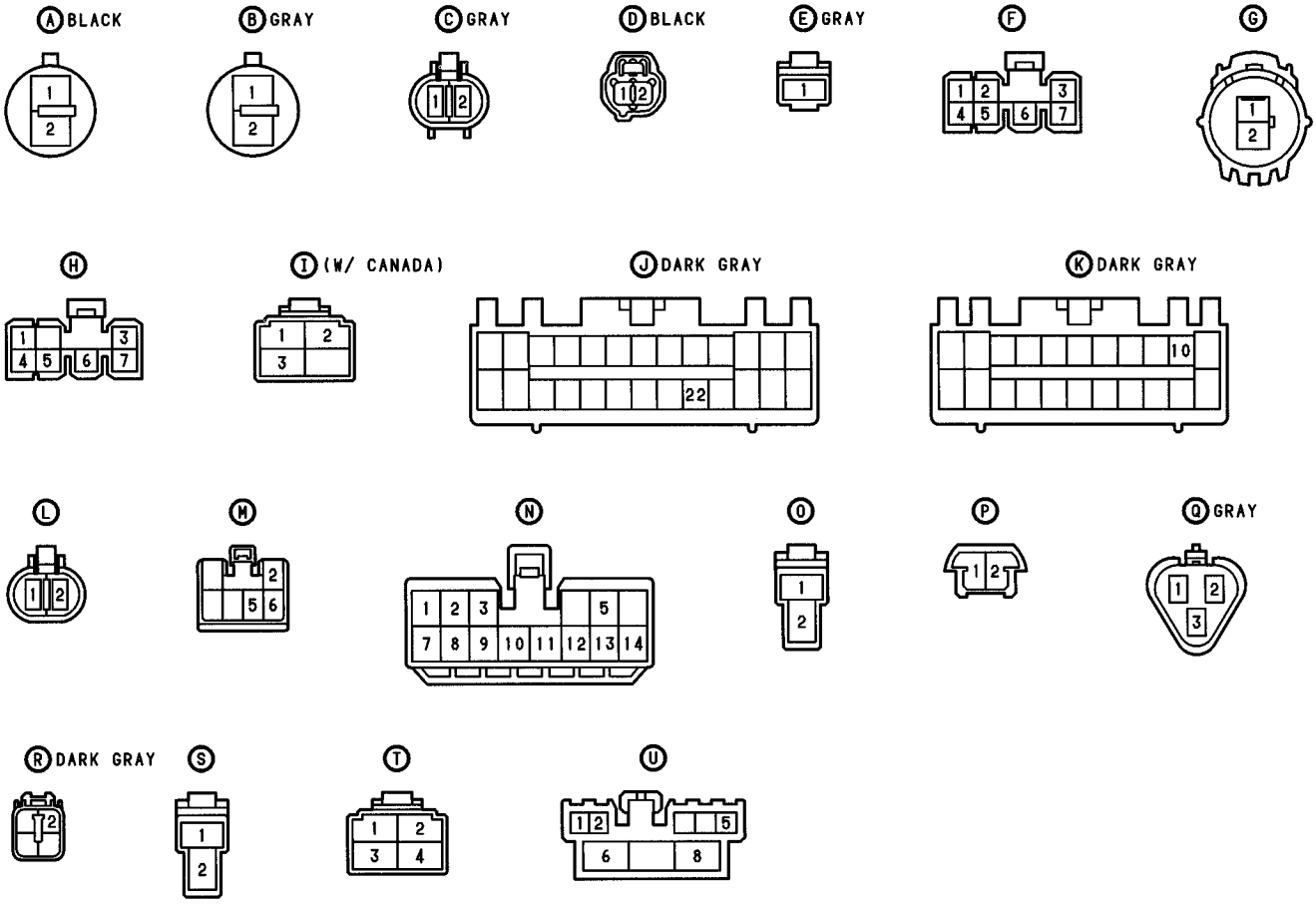

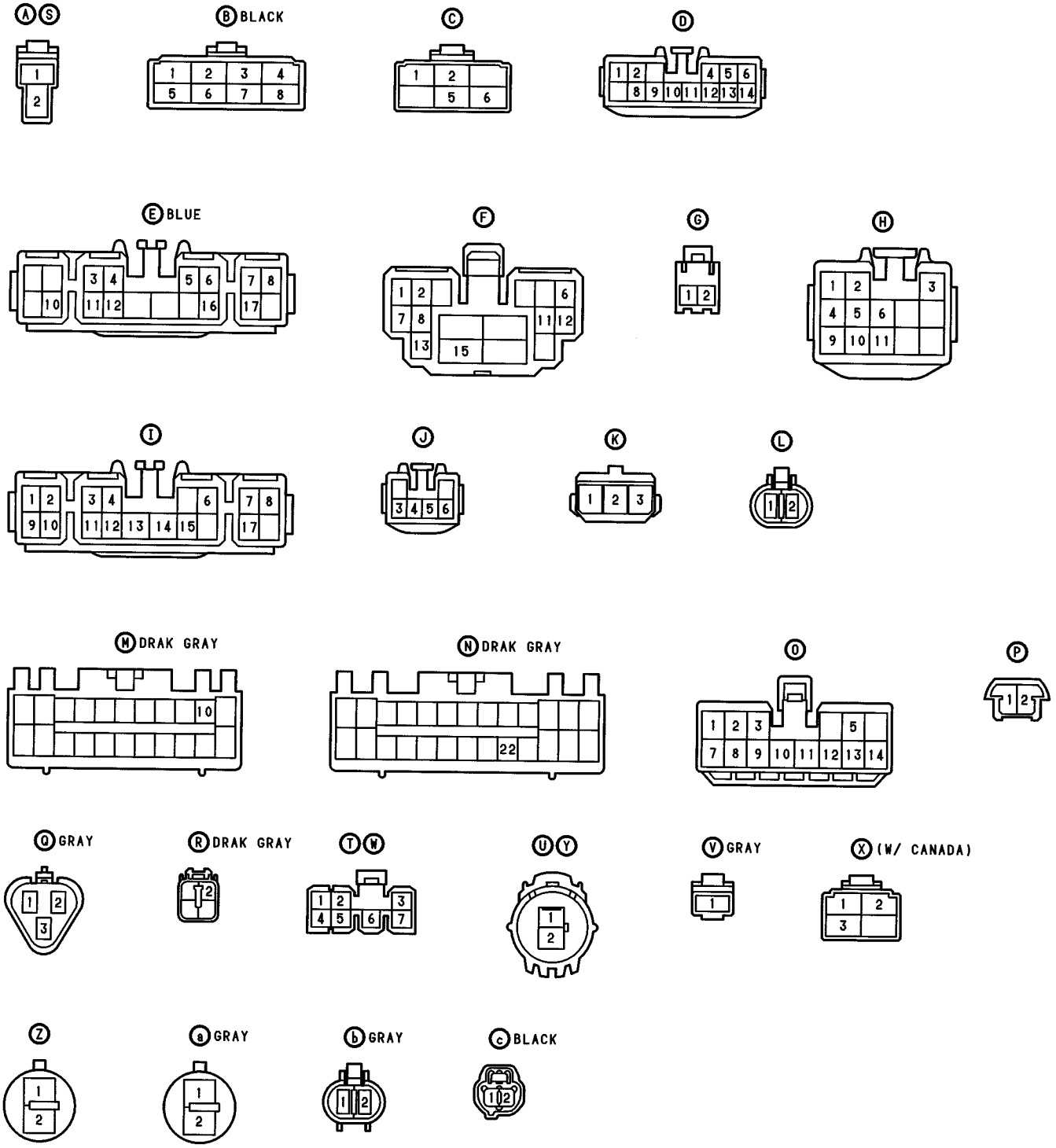
Ⓐ Ⓢ
Ⓑ BLACK
Ⓒ
Ⓓ
Ⓔ BLUE
Ⓕ
Ⓖ
Ⓗ
Ⓘ
Ⓙ
Ⓚ
Ⓛ
Ⓜ DRAK GRAY
Ⓝ DRAK GRAY
Ⓞ
Ⓟ
Ⓠ GRAY
Ⓡ DRAK GRAY
Ⓣ Ⓦ
Ⓤ Ⓨ
Ⓥ GRAY
Ⓧ (W/ CANADA)
Ⓩ
ⓐ GRAY
ⓑ GRAY
ⓒ BLACK

RADIATOR FAN AND AIR CONDITIONER (2VZ–FE PUSH SWITCH TYPE)

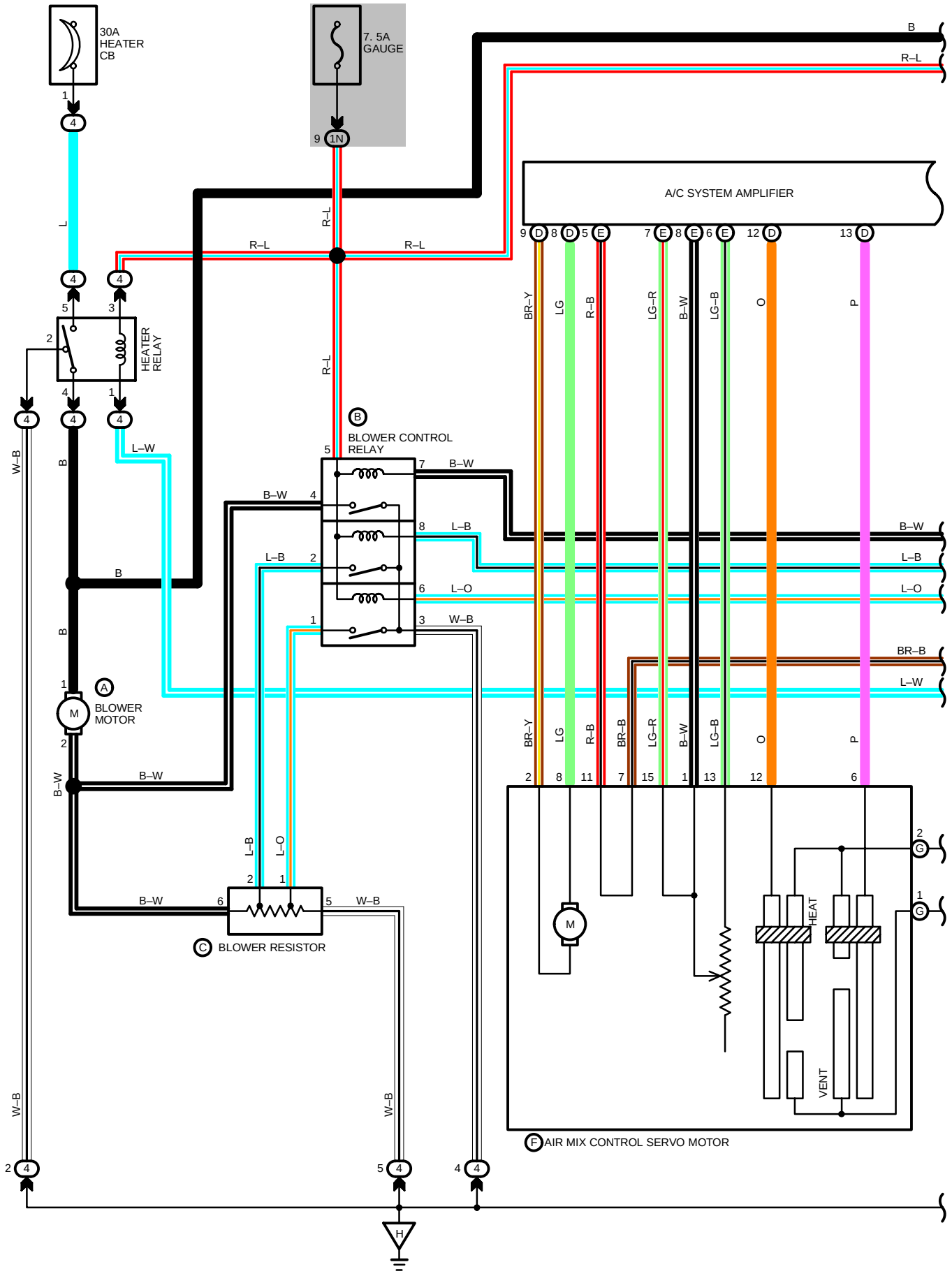

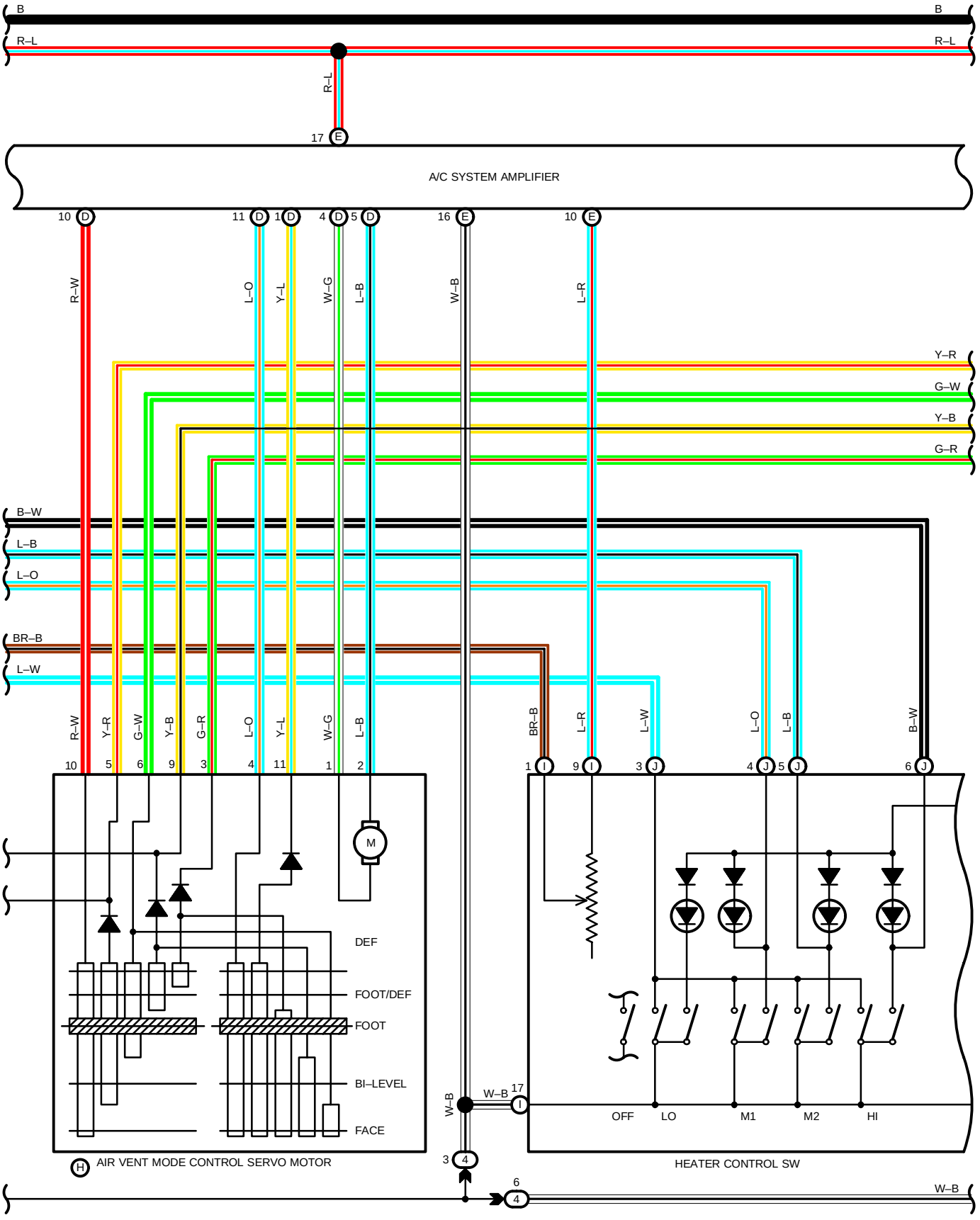
B
B
R–L
R–L
R–L
17 E
A/C SYSTEM AMPLIFIER
10 D
11 D
1 D
4 D
5 D
16 E
10 E
R–W
L–O
Y–L
W–G
L–B
W–B
L–R
Y–R
G–W
Y–B
G–R
B–W
L–B
L–O
BR–B
L–W
R–W
Y–R
G–W
Y–B
G–R
L–O
Y–L
W–G
L–B
BR–B
L–R
L–W
L–O
L–B
B–W
10
5
6
9
3
4
11
1
2
1 I
9 I
3 J
4 J
5 J
6 J
M
DEF
FOOT/DEF
FOOT
BI–LEVEL
FACE
H AIR VENT MODE CONTROL SERVO MOTOR
W–B
W–B
17 I
3 4
6 4
W–B
OFF
LO
M1
M2
HI
HEATER CONTROL SW

RADIATOR FAN AND AIR CONDITIONER (2VZ–FE PUSH SWITCH TYPE)

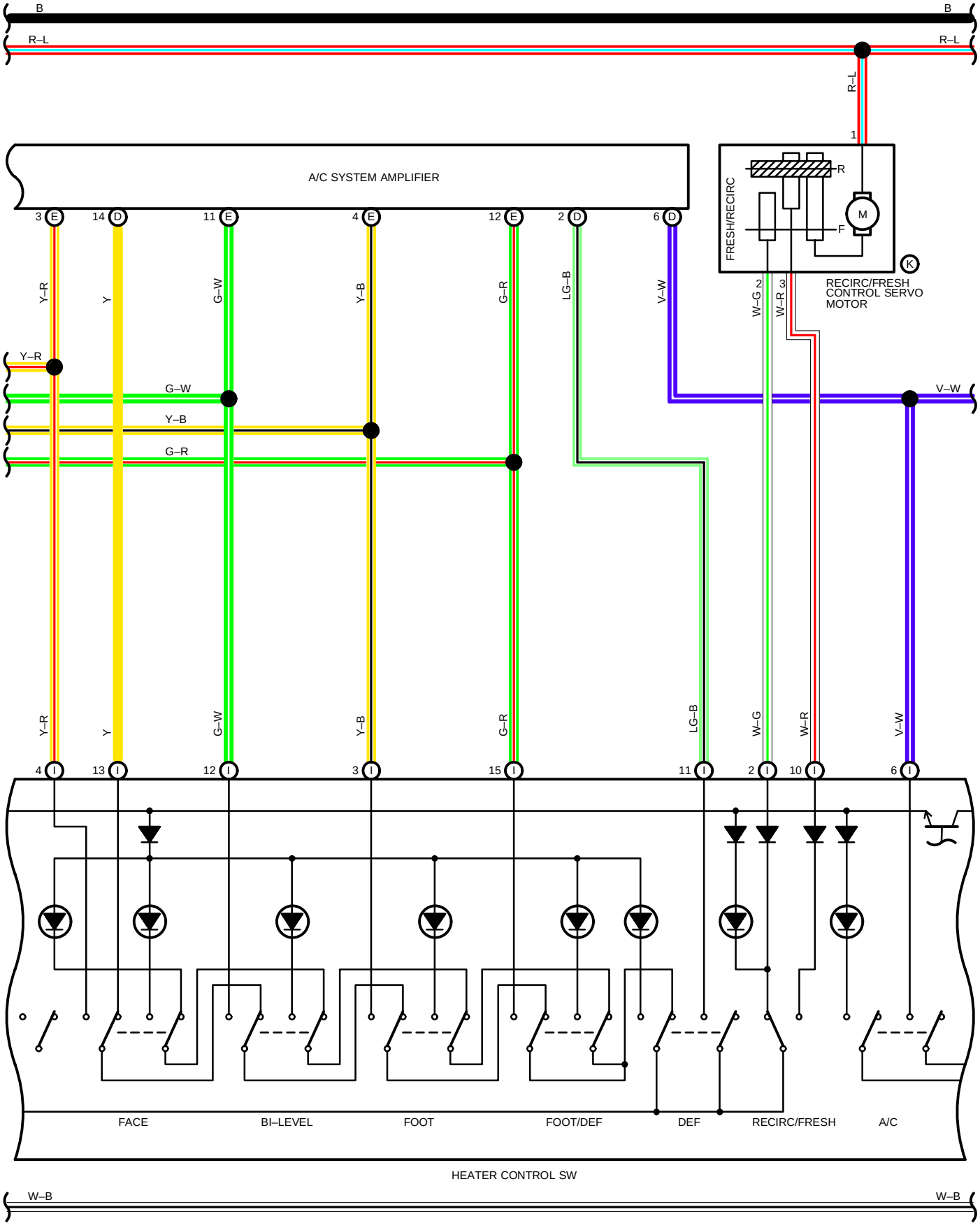

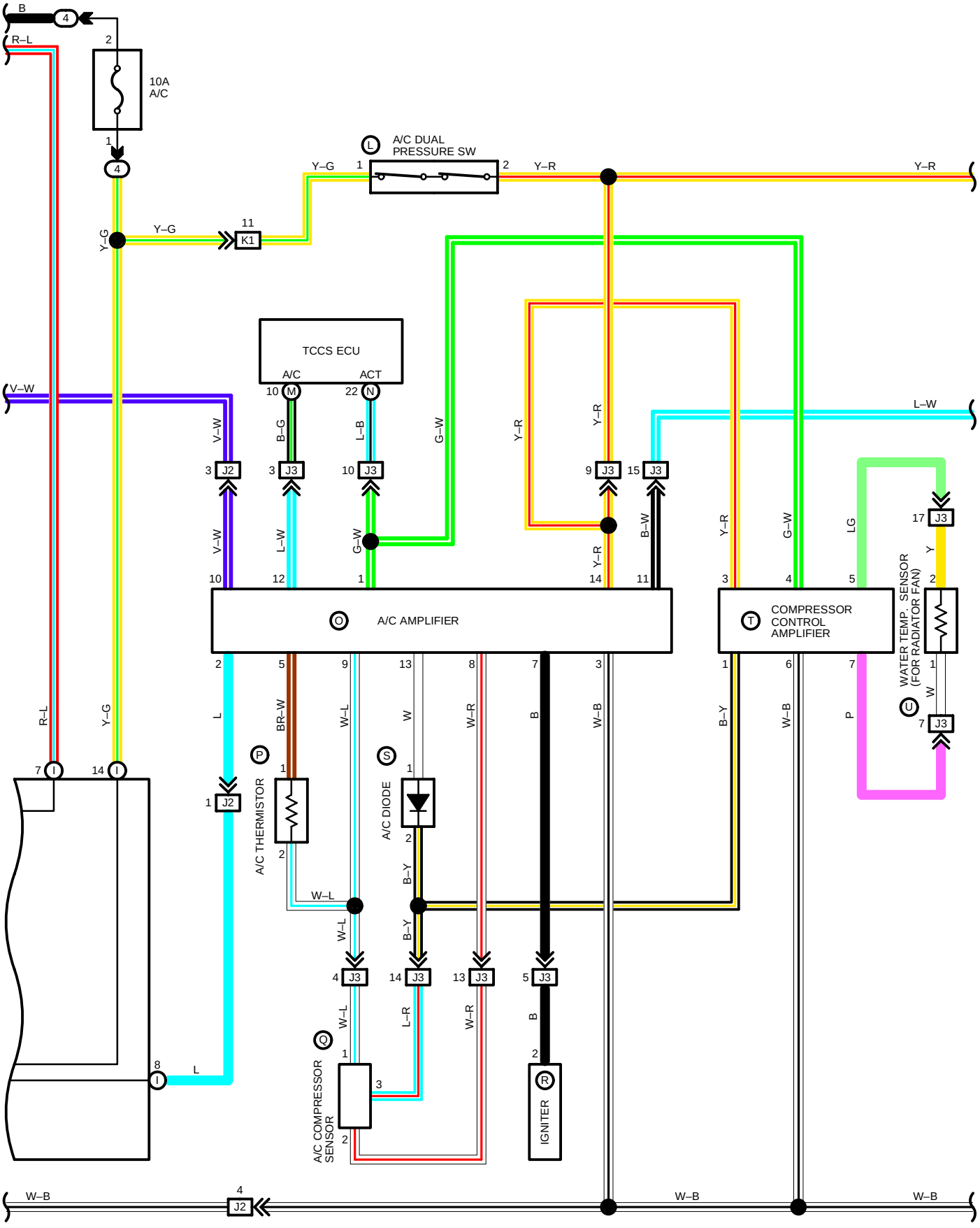
B
4
R–L
2
10A
A/C
1
4
L
A/C DUAL
PRESSURE SW
Y–G
1
2
Y–R
Y–R
Y–G
Y–G
11
K1
TCCS ECU
A/C
ACT
10
M
22
N
V–W
V–W
3
J2
B–G
3
J3
L–B
10
J3
G–W
Y–R
Y–R
9
J3
15
J3
L–W
B–W
Y–R
G–W
LG
17
J3
Y
V–W
10
L–W
12
G–W
1
Y–R
14
B–W
11
Y–R
3
G–W
4
LG
5
O
A/C AMPLIFIER
T
COMPRESSOR
CONTROL
AMPLIFIER
WATER TEMP. SENSOR
(FOR RADIATOR FAN)
2
5
9
13
8
7
3
1
6
7
2
L
BR–W
W–L
W
W–R
B
W–B
B–Y
W–B
P
U
W
1
7
J3
R–L
Y–G
7
I
14
I
P
1
S
1
1
J2
A/C THERMISTOR
2
A/C DIODE
2
B–Y
W–L
W–L
B–Y
4
J3
14
J3
13
J3
5
J3
W–L
L–R
W–R
B
Q
1
3
2
A/C COMPRESSOR
SENSOR
R
IGNITER
8
I
L
W–B
4
J2
W–B
W–B

RADIATOR FAN AND AIR CONDITIONER (2VZ–FE PUSH SWITCH TYPE)

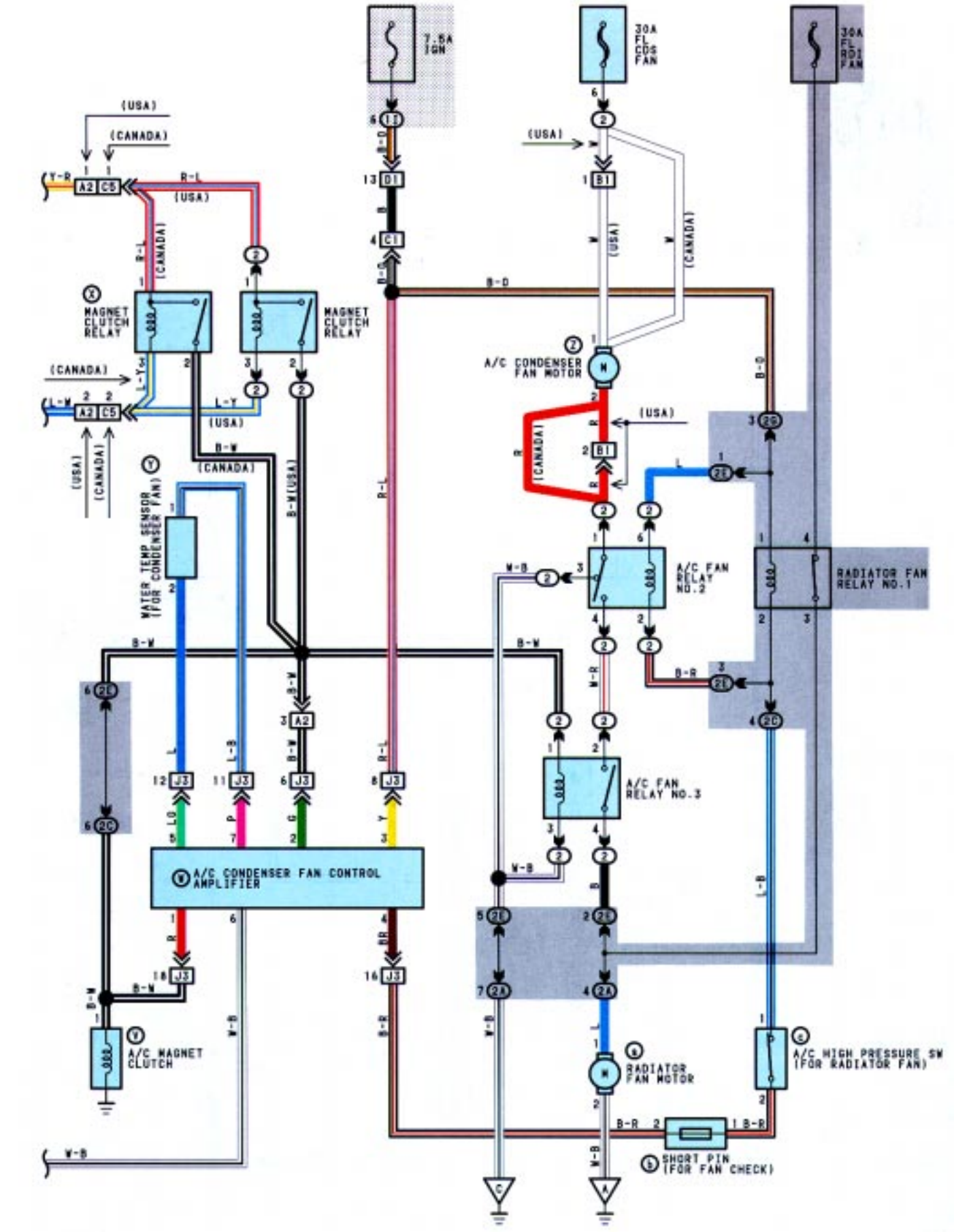

SERVICE HINTS

RADIATOR FAN RELAY NO. 1
3–4 : OPEN WITH IGNITION SW ON AND, A/C HIGH PRESSURE SW ON OR WATER TEMP. IS APPROX. **90**˚C (**194**˚F) OR MORE

HEATER RELAY
(4) 4–**(4)** 5 : CLOSED WITH IGNITION SW ON AND BLOWER SW ON

(C) BLOWER RESISTOR
1–2 : APPROX. **1.20** Ω
1–5 : APPROX. **3.70** Ω
2–6 : APPROX. **0.40** Ω

(I) HEATER CONTROL ASSEMBLY
1–9 : MORE THAN **2700** Ω WITH CONTROL LEVER AT **COOL** POSITION
LESS THAN **290** Ω WITH CONTROL LEVER AT **WARM** POSITION
APPROX. **1500** Ω WITH CONTROL LEVER AT **MIDDLE** POSITION **25**˚C (**77**˚F)

(L) A/C DUAL PRESSURE SW
1–2 : OPEN WITH PRESSURE LESS THAN **2.1** KG/CM^2 (**30** PSI, **206** KPA) OR ABOVE **27** KG/CM^2 (**384** PSI, **2648** KPA)

(W) A/C CONDENSOR FAN CONTROL AMPLIFIER
3–GROUND : APPROX. **12** VOLTS WITH IGNITION SW AT ON POSITION

(V) A/C MAGNET CLUTCH
1–GROUND : APPROX. **3.7** Ω

A/C FAN RELAY NO. 2
(2) 1–**(2)** 3 : CLOSED WITH IGNITION SW OFF, A/C HIGH PRESSURE SW OFF OR WATER TEMP. SW OFF
(2) 1–**(2)** 4 : CLOSED WITH IGNITION SW ON AND, A/C HIGH PRESSURE SW ON AND/OR WATER TEMP. IS APPROX. **90**˚C (**194**˚F) OR MORE

A/C FAN RELAY NO. 3
(2) 1–**(2)** 4 : CLOSED WITH MAGNET CLUTCH ON

(c) A/C HIGH PRESSURE SW (FOR RADIATOR FAN)
1–2 : OPEN ABOVE **15.5** KG/CM^2 (**220** PSI, **1520** KPA)
CLOSED BELOW **12.5** KG/CM^2 (**178** PSI, **1226** KPA)

○ : PARTS LOCATION

CODE		SEE PAGE	CODE		SEE PAGE	CODE		SEE PAGE
A	B5	28	**K**	R8	28	**U**	W3	24
B	B4	28	**L**	A9	24	**V**	A12	24
C	B6	28	**M**	T2	28	**W**	A18	28
D	A22	28	**N**	T4	28	**X**	A43	24
E	A23	28	**O**	A19	28	**Y**	A13	24
F	A27	28	**P**	A25	28	**Z**	A8	24
G	A27	28	**Q**	A7	24	**a**	R1	24
H	A28	28	**R**	I3	24	**b**	S1	24
I	H6	28	**S**	A25	28	**c**	A10	24
J	H7	28	**T**	A21	28			

▭ : RELAY BLOCKS

CODE	SEE PAGE	RELAY BLOCKS (RELAY BLOCK LOCATION)
2	20	R/B NO. 2 (ENGINE COMPARTMENT LEFT)
4	23	R/B NO. 4 (RIGHT KICK PANEL)

▭ : JUNCTION BLOCK AND WIRE HARNESS CONNECTOR

CODE	SEE PAGE	JUNCTION BLOCK AND WIRE HARNESS (CONNECTOR LOCATION)
1I	18	COWL WIRE AND J/B NO. 1 (LEFT KICK PANEL)
1N		
2A	20	ENGINE ROOM MAIN WIRE AND J/B NO. 2 (ENGINE COMPARTMENT LEFT)
2C	20	ENGINE WIRE AND J/B NO. 2 (ENGINE COMPARTMENT LEFT)
2E	20	ENGINE ROOM NO. 4 WIRE AND J/B NO. 2 (ENGINE COMPARTMENT LEFT)
2G	20	ENGINE WIRE AND J/B NO. 2 (ENGINE COMPARTMENT LEFT)

RADIATOR FAN AND AIR CONDITIONER (2VZ–FE PUSH SWITCH TYPE)

: CONNECTOR JOINING WIRE HARNESS AND WIRE HARNESS

CODE	SEE PAGE	JOINING WIRE HARNESS AND WIRE HARNESS (CONNECTOR LOCATION)
A2	30	ENGINE WIRE AND ENGINE ROOM NO. 4 WIRE (NEAR J/B NO. 2)
B1	32	ENGINE ROOM MAIN WIRE AND ENGINE ROOM NO. 4 WIRE (NEAR J/B NO. 2)
C1	30	ENGINE ROOM MAIN WIRE AND ENGINE WIRE (NEAR J/B NO. 2)
C5	30	ENGINE WIRE AND ENGINE ROOM NO. 4 WIRE (NEAR J/B NO. 2)
D1	30	ENGINE ROOM WIRE AND COWL WIRE (LEFT KICK PANEL)
J2	34	COWL WIRE AND A/C WIRE (BEHIND GLOVE BOX)
J3	34	ENGINE WIRE AND A/C WIRE (BEHIND GLOVE BOX)
K1	34	ENGINE WIRE AND COWL WIRE (BEHIND GLOVE BOX)

: GROUND POINTS

CODE	SEE PAGE	GROUND POINTS LOCATION
A	30	RIGHT FENDER
C	30	RADIATOR LEFT
H	34	R/B NO. 4 SET BOLT

GROUND POINTS

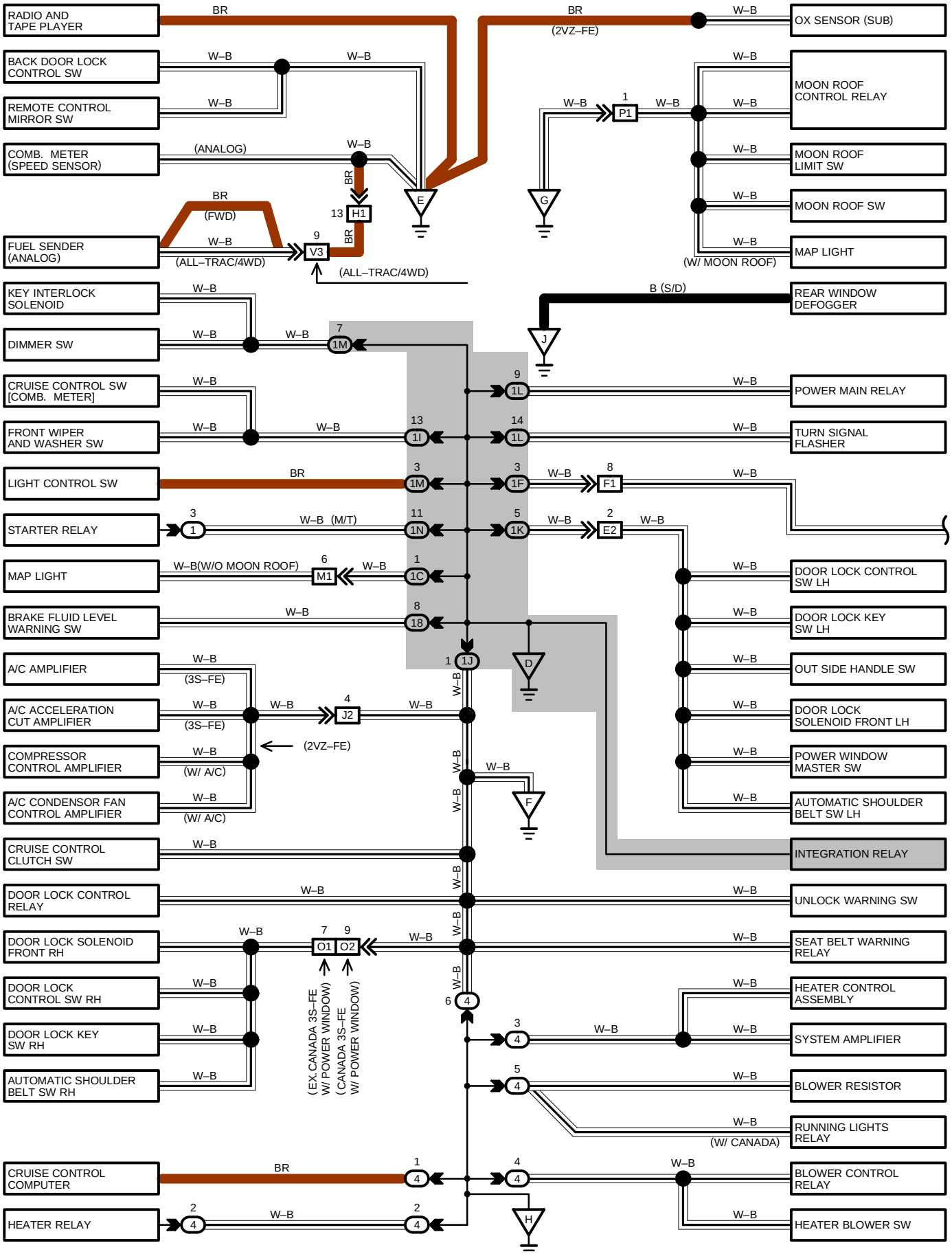

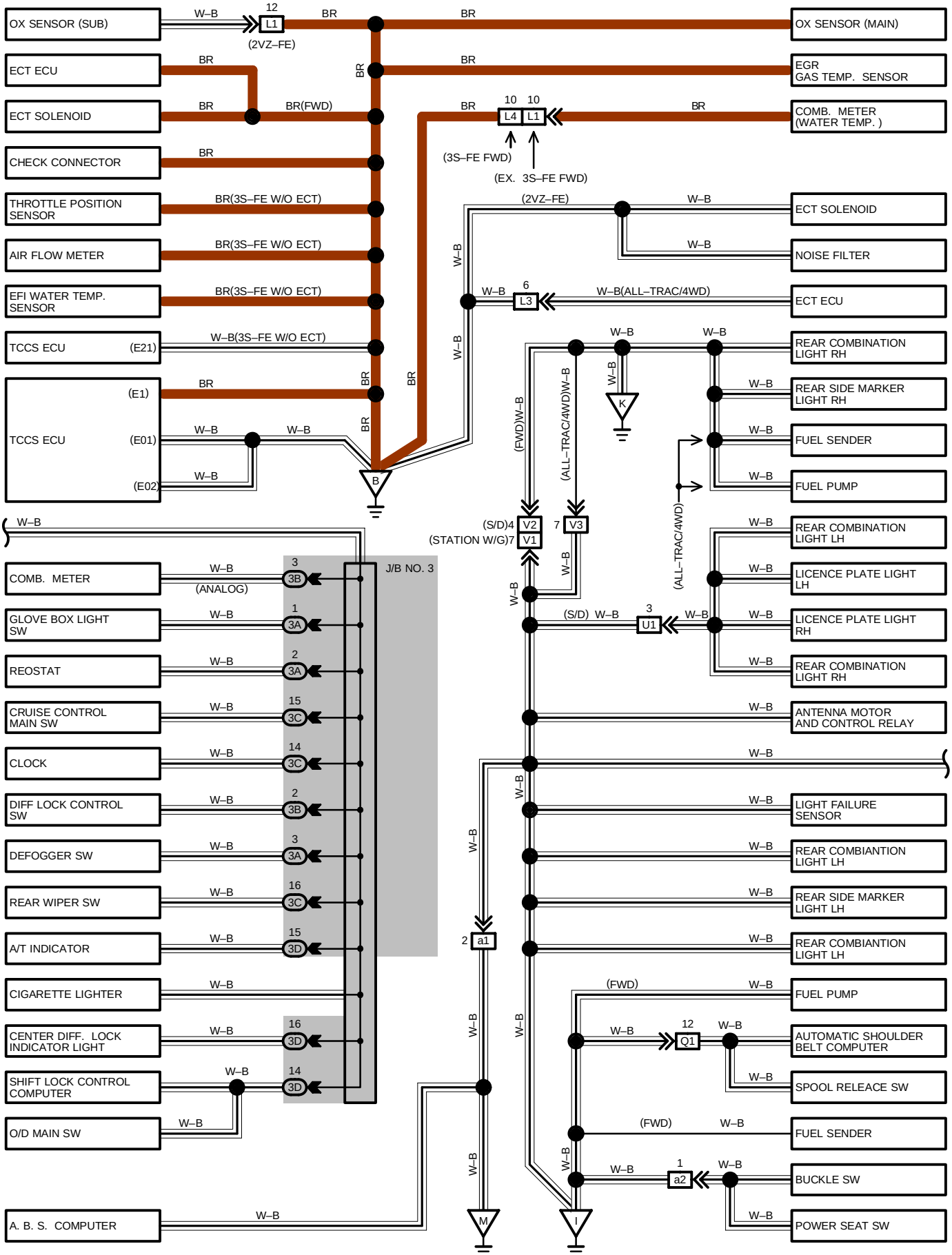
OX SENSOR (SUB)
W–B
12
L1
(2VZ–FE)
BR
BR
OX SENSOR (MAIN)
ECT ECU
BR
BR
EGR
GAS TEMP. SENSOR
ECT SOLENOID
BR
BR(FWD)
BR
10
10
L4
L1
BR
COMB. METER
(WATER TEMP.)
(3S–FE FWD)
(EX. 3S–FE FWD)
CHECK CONNECTOR
BR
THROTTLE POSITION SENSOR
BR(3S–FE W/O ECT)
(2VZ–FE)
W–B
ECT SOLENOID
AIR FLOW METER
BR(3S–FE W/O ECT)
W–B
NOISE FILTER
EFI WATER TEMP. SENSOR
BR(3S–FE W/O ECT)
W–B
6
L3
W–B(ALL–TRAC/4WD)
ECT ECU
TCCS ECU
(E21)
W–B(3S–FE W/O ECT)
W–B
W–B
REAR COMBINATION LIGHT RH
(E1)
BR
TCCS ECU
(E01)
W–B
W–B
K
REAR SIDE MARKER LIGHT RH
(E02)
W–B
B
(FWD)W–B
(ALL–TRAC/4WD)W–B
FUEL SENDER
FUEL PUMP
W–B
(S/D)4
V2
7
V3
(STATION W/G)7
V1
REAR COMBINATION LIGHT LH
(ALL–TRAC/4WD)
LICENCE PLATE LIGHT LH
(S/D)
U1
LICENCE PLATE LIGHT RH
REAR COMBINATION LIGHT RH
J/B NO. 3
COMB. METER
(ANALOG)
3B
ANTENNA MOTOR AND CONTROL RELAY
GLOVE BOX LIGHT SW
3A
REOSTAT
3A
CRUISE CONTROL MAIN SW
3C
CLOCK
3C
DIFF LOCK CONTROL SW
3B
LIGHT FAILURE SENSOR
DEFOGGER SW
3A
REAR COMBIANTION LIGHT LH
REAR WIPER SW
3C
REAR SIDE MARKER LIGHT LH
2
a1
A/T INDICATOR
3D
REAR COMBIANTION LIGHT LH
CIGARETTE LIGHTER
(FWD)
FUEL PUMP
CENTER DIFF. LOCK INDICATOR LIGHT
3D
12
Q1
AUTOMATIC SHOULDER BELT COMPUTER
SHIFT LOCK CONTROL COMPUTER
3D
SPOOL RELEACE SW
O/D MAIN SW
(FWD)
FUEL SENDER
1
a2
BUCKLE SW
A. B. S. COMPUTER
M
I
POWER SEAT SW

GROUND POINTS

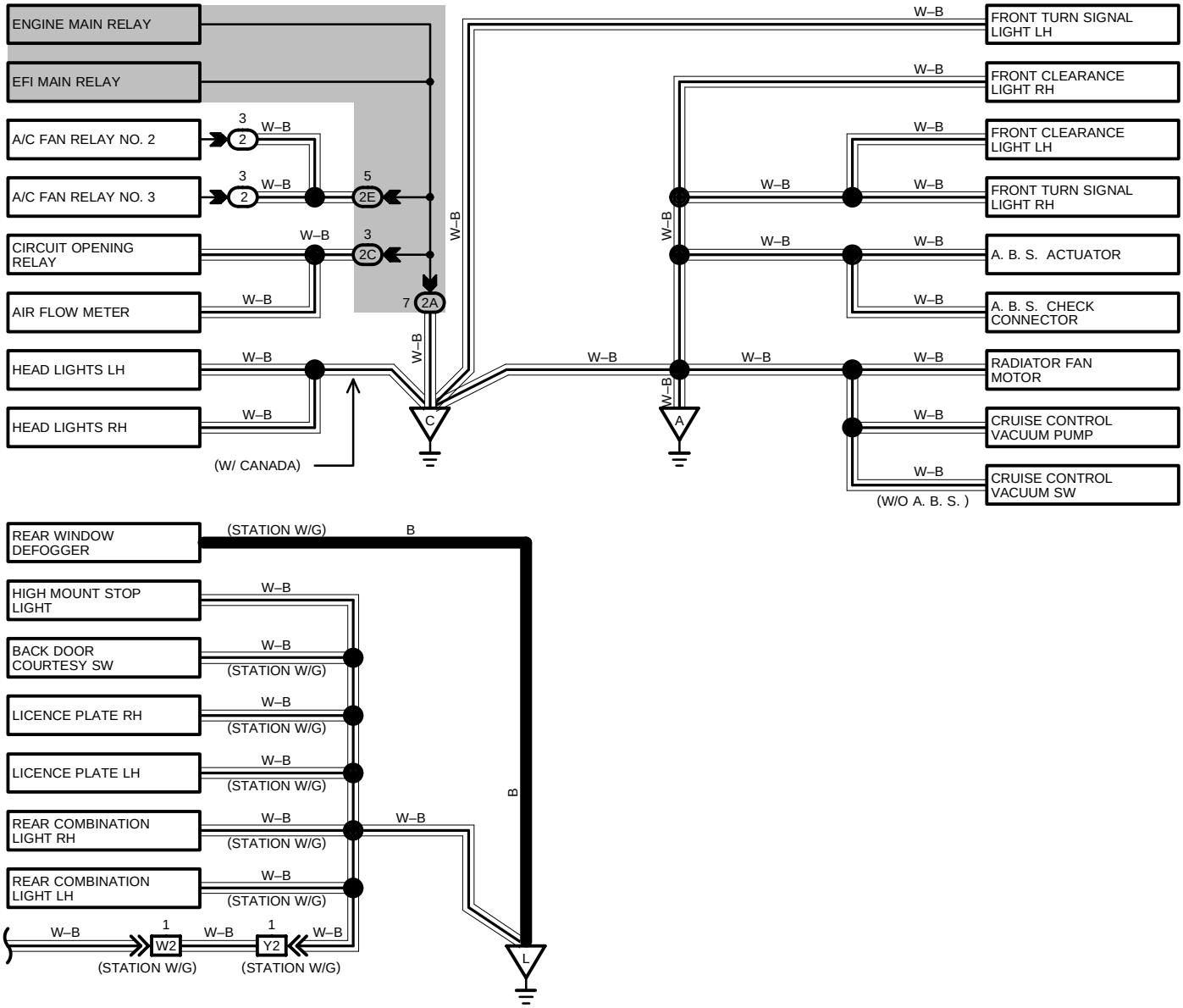

: RELAY BLOCKS

CODE	SEE PAGE	RELAY BLOCKS (RELAY BLOCK LOCATION)
1	21	R/B NO. 1 (LEFT KICK PANEL)
2	18	R/B NO. 2 (ENGINE COMPARTMENT LEFT)
4	21	R/B NO. 4 (RIGHT KICK PANEL)

: JUNCTION BLOCK AND WIRE HARNESS CONNECTOR

CODE	SEE PAGE	JUNCTION BLOCK AND WIRE HARNESS (CONNECTOR LOCATION)
1B	18	ENGINE ROOM MAIN WIRE AND J/B NO. 1 (LEFT KICK PANEL)
1C	18	COWL WIRE AND J/B NO. 1 (LEFT KICK PANEL)
1F	18	COWL SUB WIRE AND J/B NO. 1 (LEFT KICK PANEL)
1I	18	COWL WIRE AND J/B NO. 1 (LEFT KICK PANEL)
1J		
1K		
1L		
1M		
1N		
2A	20	ENGINE ROOM MAIN WIRE AND J/B NO. 2 (ENGINE COMPARTMENT LEFT)
2C	20	ENGINE WIRE AND J/B NO. 2 (ENGINE COMPARTMENT LEFT)
2E	20	ENGINE ROOM NO. 4 WIRE AND J/B NO. 2 (ENGINE COMPARTMENT LEFT)
3A	22	INSTRUMENT PANEL WIRE AND J/B NO. 3 (INSTRUMENT PANEL LEFT)
3B		
3C		
3D		

: CONNECTOR JOINING WIRE HARNESS AND WIRE HARNESS

CODE	SEE PAGE	JOINING WIRE HARNESS AND WIRE HARNESS (CONNECTOR LOCATION)
E2	34	FRONT DOOR LH WIRE AND COWL WIRE (LEFT KICK PANEL)
F1	34	INSTRUMENT PANEL WIRE AND COWL SUB WIRE (LEFT KICK PANEL)
H1	34	FLOOR NO. 1 WIRE AND INSTRUMENT PANEL WIRE (LEFT KICK PANEL)
J2	34	COWL WIRE AND A/C WIRE (BEHIND GLOVE BOX)
L1	34	ENGINE WIRE AND INSTRUMENT PANEL WIRE (BEHIND GLOVE BOX)
L3		
L4		
M1	34	COWL WIRE AND ROOF WIRE (INSTRUMENT PANEL RIGHT)
O1	34	FRONT DOOR RH WIRE AND COWL WIRE (RIGHT KICK PANEL)
O2		
P1	36 (S/D)	ROOF NO. 2 WIRE AND ROOF WIRE (W/ MOON ROOF, ROOF RIGHT)
	38 (STATION W/G)	
Q1	36 (S/D)	FLOOR NO. 3 WIRE AND FLOOR NO. 1 WIRE (FLOOR CENTER)
	38 (STATION W/G)	
U1	36	FLOOR NO. 1 WIRE AND LUGGAGE ROOM NO. 2 WIRE (LUGGAGE COMPARTMENT DOOR)
V1	38	LUGGAGE ROOM NO. 1 WIRE AND FLOOR NO. 1 WIRE (BACK PANEL LEFT)
V2	36 (S/D)	FLOOR NO. 1 WIRE AND LUGGAGE ROOM NO. 1 WIRE (BACK PANEL LEFT)
V3		
W2	38	BACK DOOR NO. 1 WIRE AND FLOOR NO. 1 WIRE (BACK PANEL LEFT)
Y2	38	BACK DOOR NO. 1 WIRE AND BACK DOOR NO. 2 WIRE (BACK DOOR LEFT)
a1	36 (S/D)	FLOOR NO. 2 WIRE AND FLOOR NO. 1 WIRE (UNDER REAR SEAT PANEL)
	38 (STATION W/G)	
a2	34	FLOOR NO. 1 WIRE AND SEAT WIRE (UNDER DRIVER'S SEAT)

: GROUND POINTS

CODE	SEE PAGE	GROUND POINTS LOCATION
A	30 (2VZ–FE)	RIGHT FENDER
	32 (3S–FE)	
B	30 (2VZ–FE)	INTAKE MANIFOLD
	32 (3S–FE)	
C	30 (2VZ–FE)	RADIATOR LEFT
	32 (3S–FE)	
D	34	J/B NO. 1 SET BOLT
E	34	LEFT KICK PANEL
F	34	INSTRUMENT PANEL CENTER
G	36 (S/D)	ROOF RIGHT (W/ MOON ROOM)
	38 (STATION W/G)	
H	34	R/B NO. 4 SET BOLT
I	36 (S/D)	LEFT REAR FENDER
	38 (STATION W/G)	
J	36	RIGHT REAR PILLAR
K	36 (S/D)	BACK PANEL CENTER
	38 (STATION W/G)	DECK RIGHT
L	38	BACK DOOR RIGHT
M	36 (S/D)	RIGHT REAR FENDER
	38 (STATION W/G)	